LEZIONI DI
FILTRI ANALOGICI

Danilo Manstretta

AA 2012-13

High Order OA-RC Filters

$$H(s) = \frac{a_{n-1}s^{n-1} + \ldots + a_2 s^2 + a_1 s + a_0}{s^n + b_{n-1}s^{n-1} + \ldots + b_2 s^2 + b_1 s + b_0}$$

The goal of this lecture is to learn how to design high order OA-RC filters using **real OTAs**.

Ideal Operational Amplifier

symbol

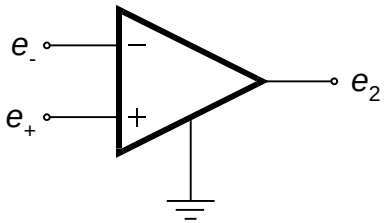

equivalent circuit

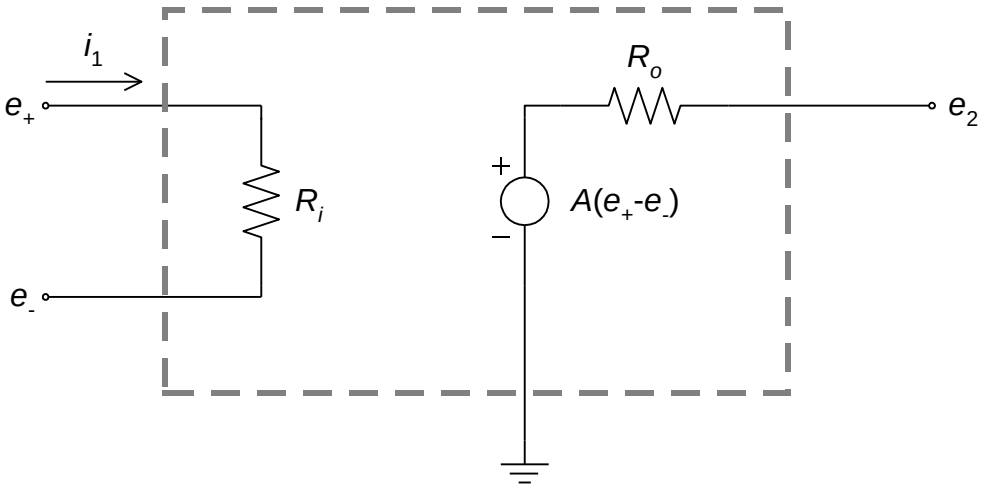

In an ideal op-amp we assume:

- input resistance R_i approaches infinity, thus $i_1 = 0$
- output resistance R_o approaches zero
- amplifier gain A approaches infinity

Operational Transconductance Amplifier

symbol

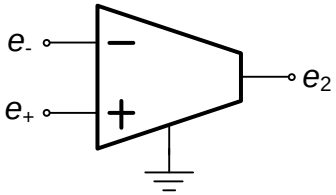

equivalent circuit

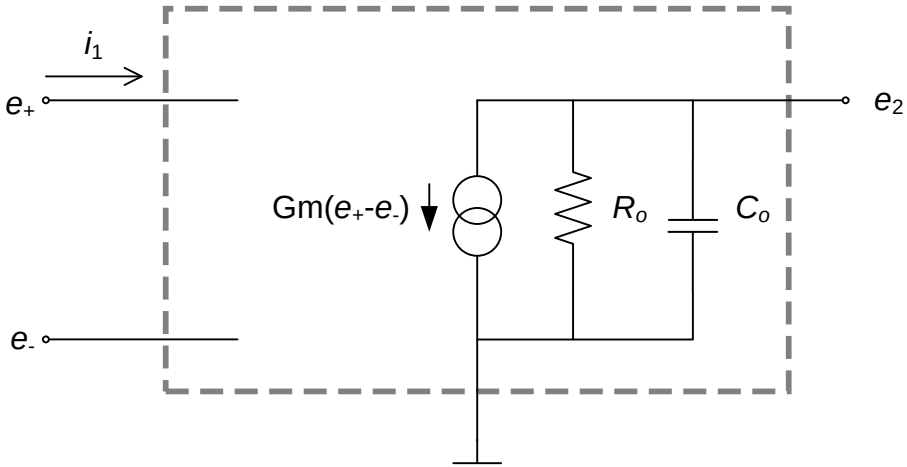

In a real Operational Transconductance Amplifier (OTA) we assume:

- input resistance R_i approaches infinity, thus $i_1 = 0$
- Finite DC gain (A_0=GmR_o)
- Finite gain-bandwidth product (Gm/C_0)
- Gm has a finite value

Cacaded Biquads Implementation

$$H(s) = \frac{(s - s_{z,1})(s - s_{z,1}^*)}{(s - s_{p,1})(s - s_{p,1}^*)} \cdot \frac{(s - s_{z,2})(s - s_{z,2}^*)}{(s - s_{p,2})(s - s_{p,2}^*)} \cdot \frac{(s - s_{z,3})(s - s_{z,3}^*)}{(s - s_{p,3})(s - s_{p,3}^*)} \cdot \ldots$$

s or 1/s

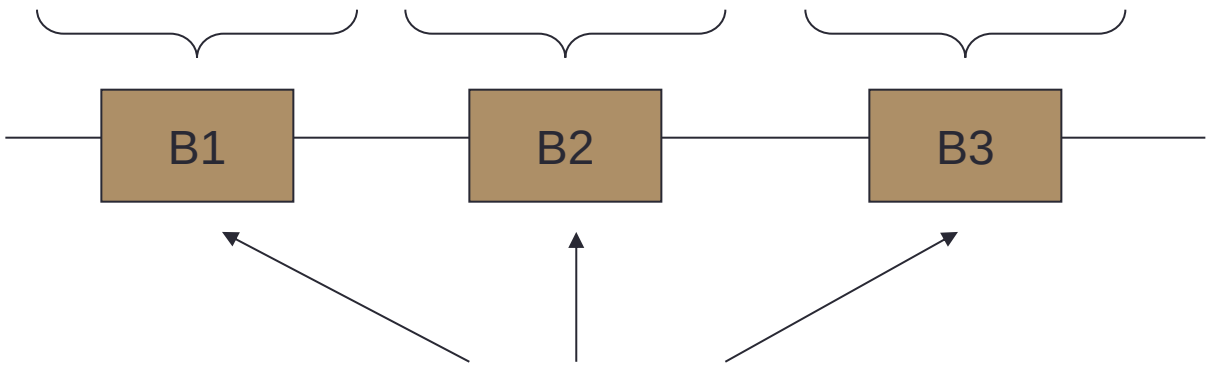

biquads

SINGLE-OTA BIQUADS

Sallen-Key, Rauch

Low-Pass Rauch Filter

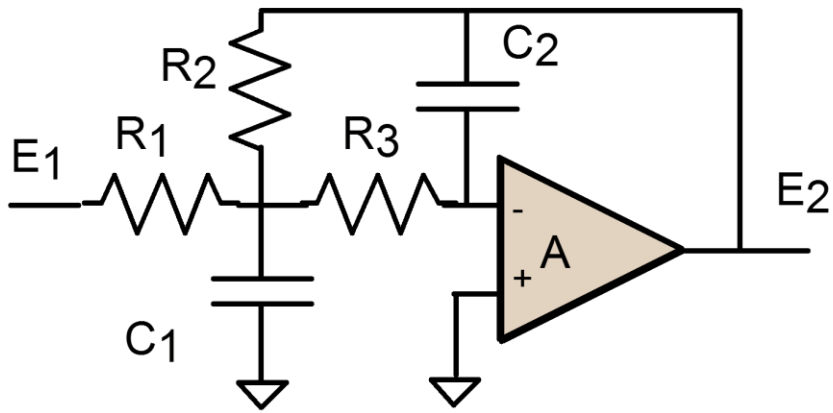

$$Q = \sqrt{\frac{C_1}{C_2}} \frac{1}{\frac{\sqrt{R_2 R_3}}{R_1} + \sqrt{\frac{R_3}{R_2}} + \sqrt{\frac{R_2}{R_3}}}$$

$$\omega_0 = \frac{1}{\sqrt{R_2 R_3 C_1 C_2}}$$

$$G = -\frac{R_2}{R_1}$$

$$H(s) = \frac{-R_2/R_1}{1 + sC_2\left[R_2 + R_3 + \frac{R_2 R_3}{R_1}\right] + s^2 C_1 C_2 R_2 R_3}$$

Rauch Low-Pass with Real OTA

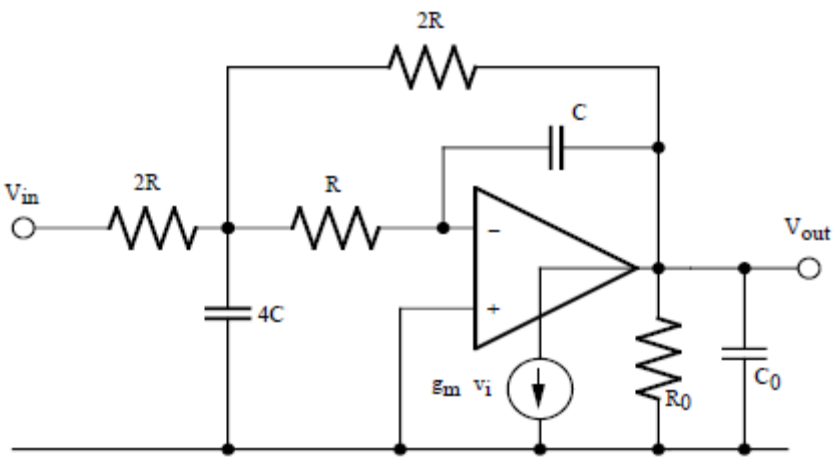

- In order to simplify the equations, consider a specific implementation:
  - $C_1=4C_2=4C$
  - $R_1=R_2=2R_3=2R$

Ideal transfer function:

$$H(s) = \frac{-1}{1 + s4RC + s^2 8R^2C^2}$$

$$\omega_0 = \frac{1}{2\sqrt{2}RC} \qquad Q=1/\sqrt{2} \qquad G = -1$$

- **What is the effect of the real OTA on the transfer function?**

Rauch Low-Pass with Real OTA (ii)

$$H(s) = \frac{-1 + s(R+R_0)C/(A_0+1)}{\alpha + s\beta + s^2\gamma + s^3\delta}$$

$$\alpha = 1 + \frac{4}{A_0 - 1}$$

$$\beta = 4RC + \frac{2R_0C_0 + R_0C + 13RC}{A_0 - 1}$$

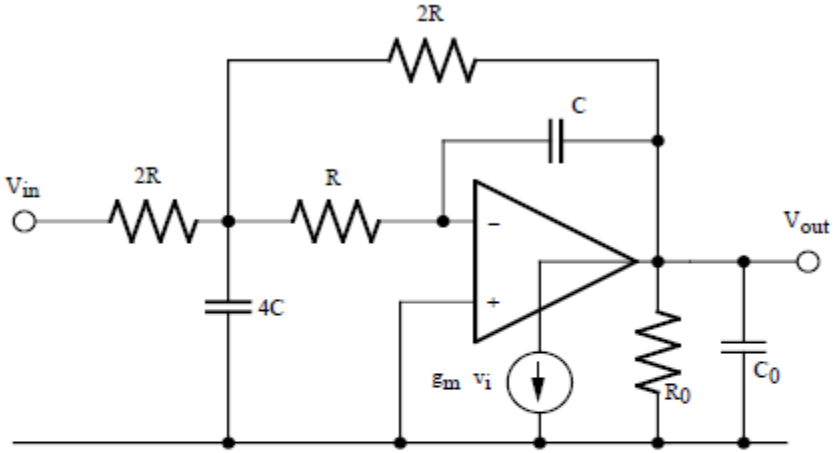

$$\gamma = 8R^2C^2 + \frac{6RR_0CC_0 + 2RR_0C^2 + 18R^2C^2}{A_0 - 1} \qquad \delta = 8 \cdot \frac{R^2R_0C_0C^2}{A_0 - 1} \qquad A_0 = g_mR_0$$

- The transfer function has one zero and three poles.

Rauch Low-Pass with Real OTA (iii)

Zero is located in the right half-plane (RHP) zero close to **g_m/C**

Complex poles frequency is shifted and Q is modified: limited gm and GBW lead to poles Q enhancement, finite gain leads to Q degradation

Additional (real) pole: around the OTA unity gain frequency (- g_m/C_0)

Sallen-Key Biquad (ii)

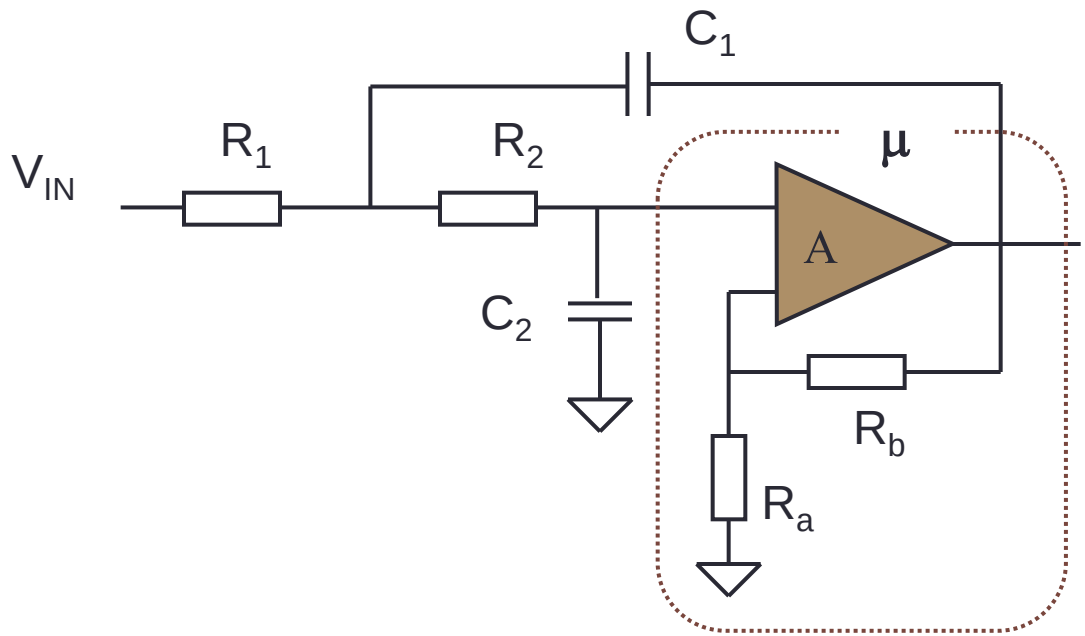

$$\omega_0 = \frac{1}{\sqrt{R_1 R_2 C_1 C_2}}$$

$$Q = \frac{\dfrac{1}{\sqrt{R_1 R_2 C_1 C_2}}}{\dfrac{1}{R_1 C_1} + \dfrac{1}{R_2 C_1} + \dfrac{1-\mu}{R_2 C_2}}$$

$$G = \mu$$

$$H(s) = \frac{\mu / R_1 R_2 C_1 C_2}{\underbrace{\dfrac{1}{R_1 R_2 C_1 C_2} + s\left[\dfrac{1}{R_1 C_1} + \dfrac{1}{R_2 C_1} + \dfrac{1-\mu}{R_2 C_2}\right] + s^2}_{\omega_0^2 + s\omega_0/Q + s^2}}$$

Sallen-Key Design Strategies

- Five design elements, two main properties (G is less important): several design degrees of freedom

$$\omega_0 = \frac{1}{\sqrt{R_1 R_2 C_1 C_2}}$$

$$Q = \frac{\dfrac{1}{\sqrt{R_1 R_2 C_1 C_2}}}{\dfrac{1}{R_1 C_1} + \dfrac{1}{R_2 C_1} + \dfrac{1-\mu}{R_2 C_2}}$$

$$G = \mu$$

Design 1. $R_1=R_2=R$, $C_1=C_2=C$

$\omega_0=1/(RC)$

$G=3-1/Q$

Note: Q is independent of R,C

Design 2. $G=2$ ($R_a=R_b$), $C_1=C_2=C$

$\omega_0^2=1/(R_1R_2C^2)$

$R_1=Q/\omega_0C$

Note: $R_1/R_2=Q^2$

Design 3. $G=1$, $R_1=R_2=R$

$\omega_0^2=1/(R^2C_1C_2)$

$C_1=2Q/\omega_0C$; $C_2=1/2Q\omega_0C$

Note: $C_1/C_2=4Q^2$

Sallen-Key: finite op-amp gain

- The inverting and non-inverting terminals are not virtually shorted

$$E_2=A_0(E_4-V_-)$$

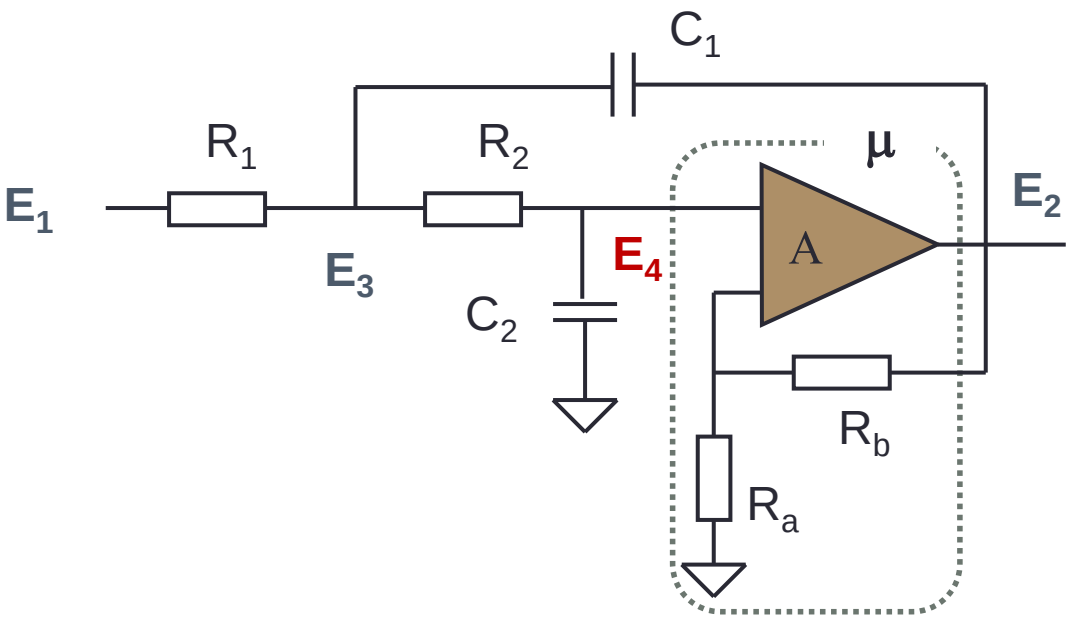

$$E_4 = \frac{E_2}{R_a + R_b} R_a + \frac{E_2}{A_0}$$

$$\mu_0 = 1 + \frac{R_B}{R_A}$$

$$E_4 = E_2 \underbrace{\left(\frac{1}{\mu_0} + \frac{1}{A_0} \right)}_{1/\mu}$$

$$E_2 = \mu E_4$$

$$\mu = \frac{\mu_0}{1 + \mu_0 / A_0}$$

Sallen-Key with OTA

- In order to simplify the equations, consider a specific implementation:
  - $C_1=2C_2=2C$
  - $R_1=R_2=R$
  - $\mu=1$

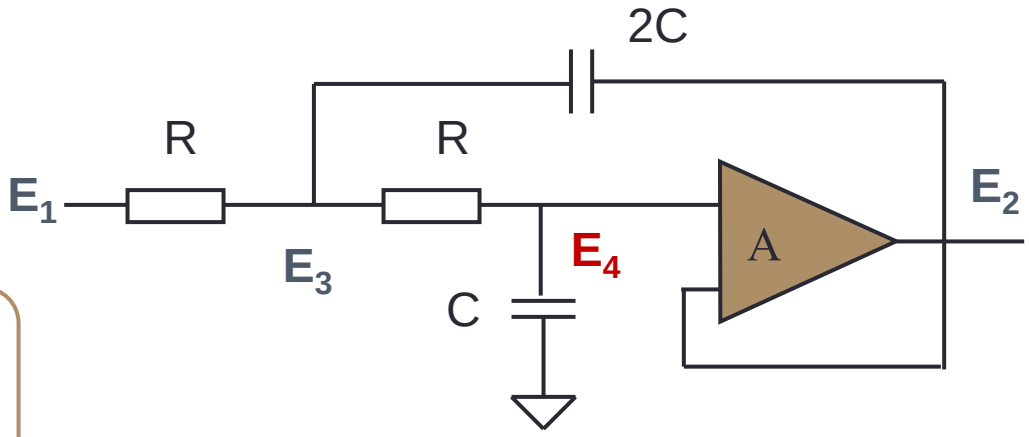

$$H(s)=\frac{1}{1+2RCs+2R^2C^2s^2}$$

$$\omega_0=\frac{1}{\sqrt{2}RC}$$

Q=1/√2

G=1

Sallen-Key with real op-amp (OTA)

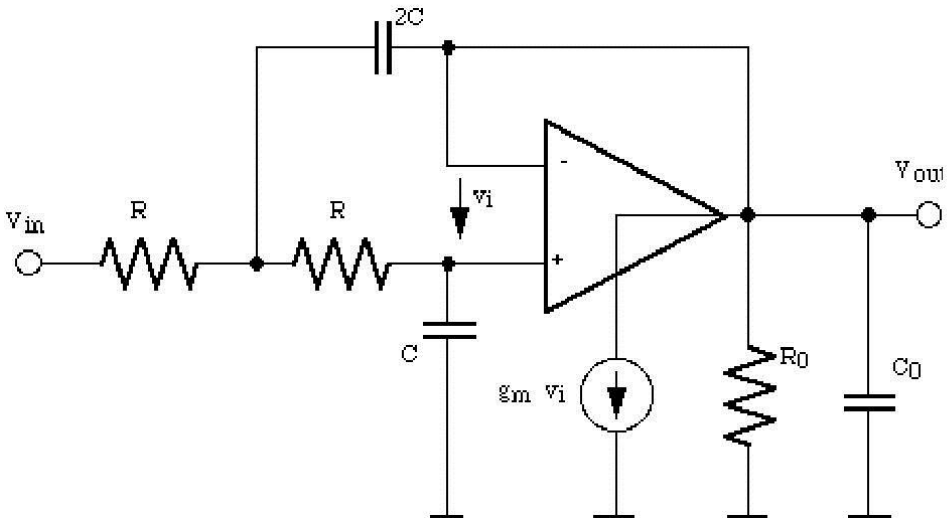

$$a_1 = \frac{2C}{g_m}$$

$$a_2 = \frac{RC^2}{g_m}$$

$$b_0 = 1 + \frac{1}{A_0}$$

$$b_1 = RC(4b_0 - 2) + \frac{2C + C_0}{g_m}$$

$$b_2 = 2b_0R^2C^2 + 4C(C + 2C_0)\frac{R}{g_m}$$

$$b_3 = 2C^2C_0\frac{R^2}{g_m}$$

$$H(s) = \frac{1 + a_1s + a_2s^2}{b_0 + b_1s + b_2s^2 + b_3s^3}$$

- 2 zeros and 3 poles

Sallen-Key with real op-amp (OTA) (ii)

- The complex zeros have $Q=(g_m R)^{1/2}/2 >>1$
  - zeros are close to being pure imaginary: notch in H(s) at the zero frequency!
  - The frequency of the zeros is $\frac{\sqrt{g_m/2R}}{C}$
- Assuming the OTA DC gain $g_m R_0 >>1$ and isolating the terms corresponding to the ideal transfer function from the parasitic pole, the denominator can be approximated as:

$$\left[1+s2C\left(R+\frac{1}{g_m}\right)+2s^2R^2C^2\left(1+\frac{2}{g_m R}\right)\right]\left(1+\frac{sC_0}{g_m}\right)$$

  - The complex poles change in frequency and Q
  - A parasitic real pole has appeared around gm/C_0

TWO-OTA BIQUADS

Fleisher-Tow, KHN, Tow-Thomas

Fleischer-Tow Biquad

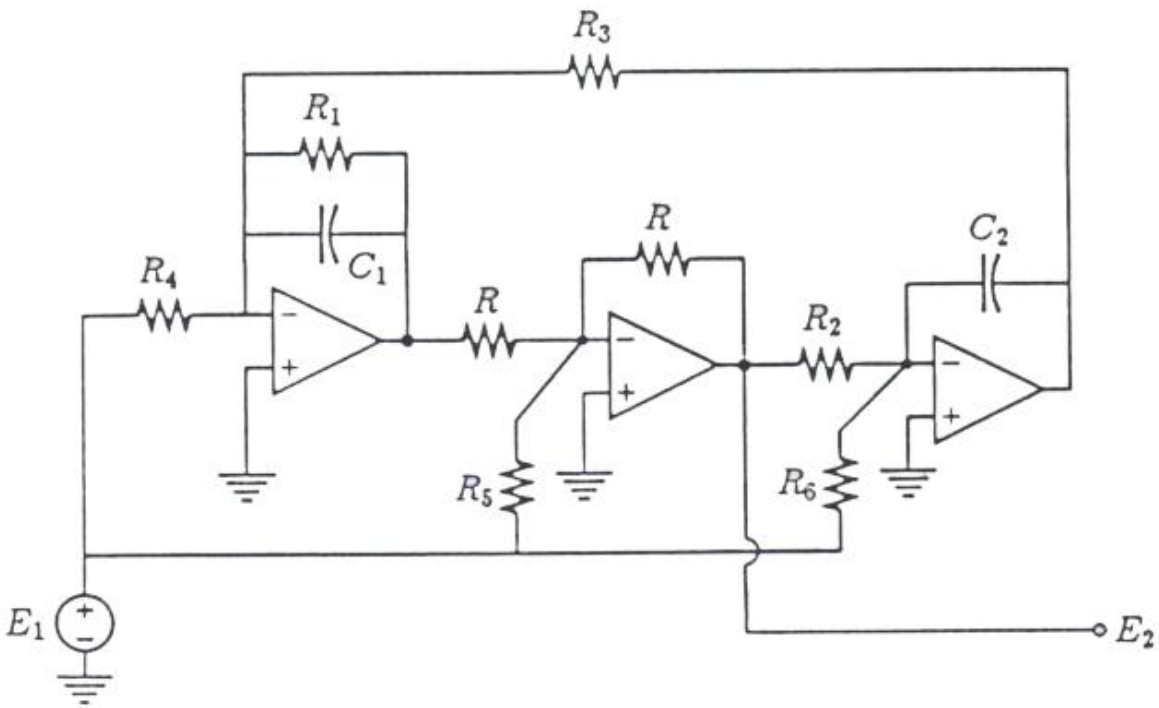

$$G = \frac{-R_2}{R_6}$$

$$\omega_0 = \frac{1}{\sqrt{R_2 R_3 C_1 C_2}}$$

$$Q = \frac{R_1}{\sqrt{R_2 R_3}} \sqrt{\frac{C_1}{C_2}}$$

$$\frac{E_2}{E_1} = -\frac{\frac{R}{R_5} s^2 + \frac{s}{R_1 C_1}\left(\frac{R}{R_5} - \frac{R_1}{R_4}\right) + \frac{1}{R_3 R_6 C_1 C_2}}{s^2 + \frac{s}{R_1 C_1} + \frac{1}{R_2 R_3 C_1 C_2}}$$

Kerwin-Huelsman-Newcomb (KHN)

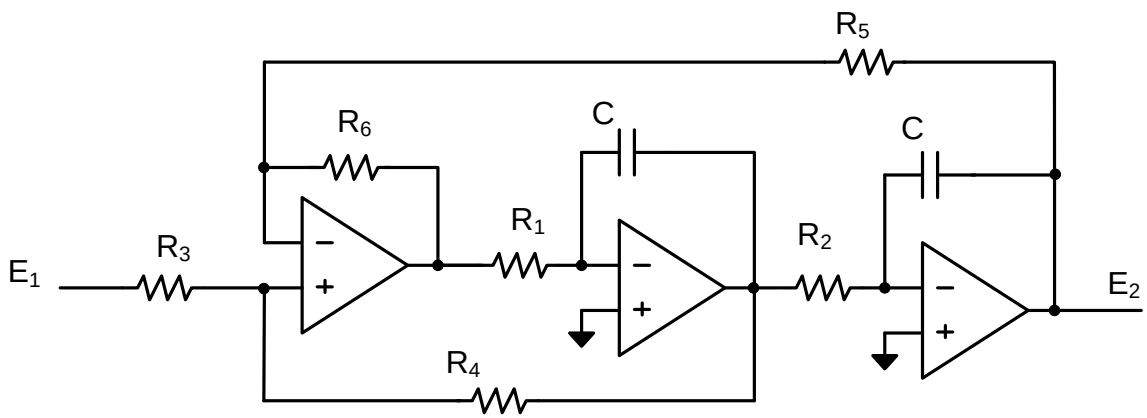

$$Q = \frac{R_5}{R_3}\frac{R_3+R_4}{R_5+R_6}\sqrt{\frac{R_6}{R_5}\frac{R_1C_1}{R_2C_2}}$$

$$\frac{E_2}{E_1} = \frac{G\omega_0^2}{s^2 + \frac{\omega_0}{Q}s + \omega_0^2}$$

$$\omega_0 = \sqrt{\frac{R_6}{R_5}\frac{1}{R_1R_2C_1C_2}}$$

$$G = \frac{R_4}{R_6}\frac{R_5+R_6}{R_3+R_4}$$

Two-Integrators Biquad Design

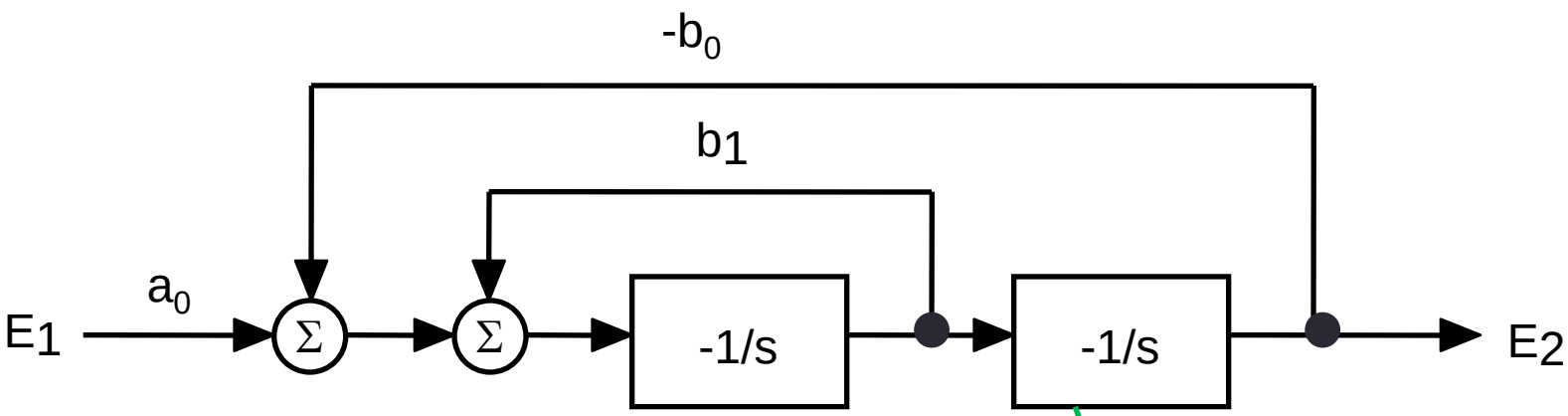

$$b_1 = \frac{\omega_0}{Q_P} \qquad a_0 = b_0 = \omega_0^2$$

$$\frac{E_2}{E_1} = \frac{a_0}{s^2 + b_1 s + b_0}$$

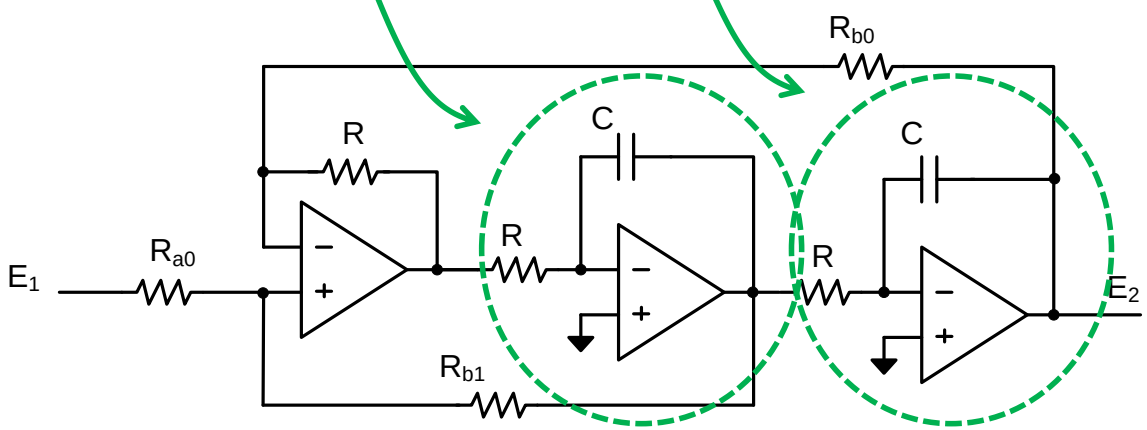

Tow-Thomas

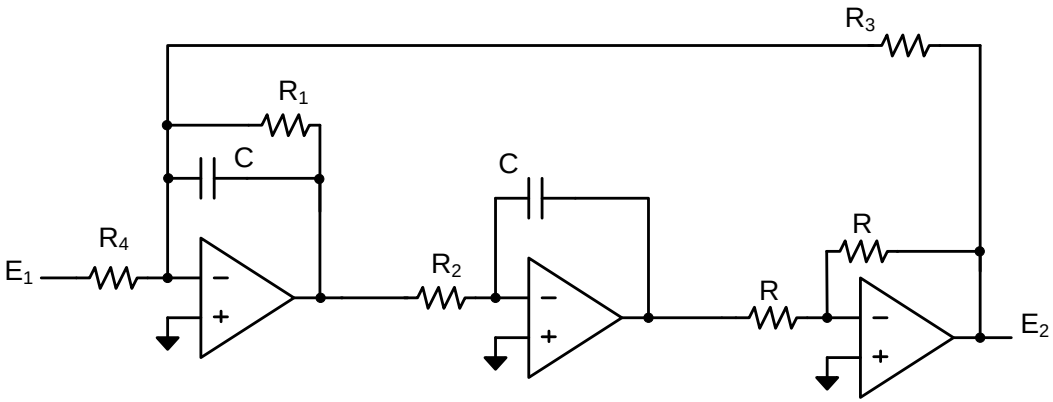

$$\frac{E_2}{E_1} = \frac{1/\left(R_2 R_4 C^2\right)}{s^2 + \frac{s}{R_1 C} + \frac{1}{R_2 R_3 C^2}}$$

$$\frac{E_2}{E_1} = \frac{G\omega_0^2}{s^2 + \frac{\omega_0}{Q} s + \omega_0^2}$$

$$G = \frac{-R_3}{R_4} \qquad \omega_0 = \frac{1}{\sqrt{R_2 R_3} C} \qquad Q = \frac{R_1}{\sqrt{R_2 R_3}}$$

Filter Design Using Real OPAMP

What happens if we replace the ideal OPAMP with a real circuit?

Let’s consider the impact of circuit limitations on the **active integrator**, the basic building block of high order filters designs.

OTA-RC Integrator

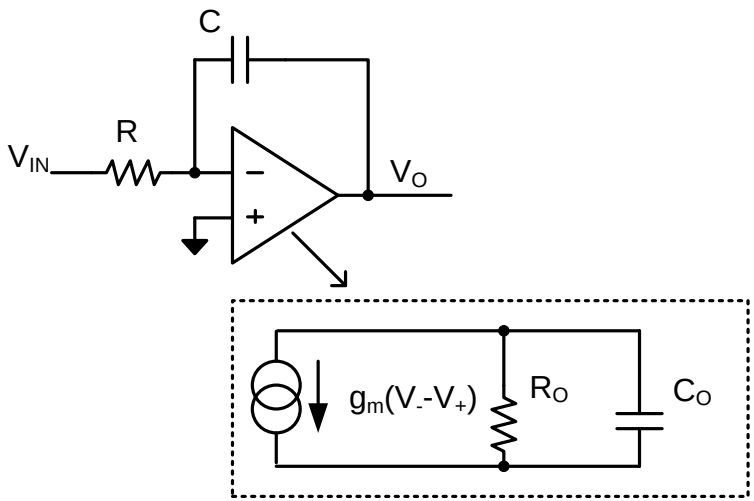

Ideal integrator:

$$v_0 = \frac{-v_{IN}}{sRC}$$

- What happens if the ideal OA is replaced with a real OTA?
- Compute the transfer function as a function of the OTA parameters
- Derive **design guidelines** for the OTA

OTA-RC Integrator Analysis

To keep equations simple lets consider different effects separately:

- Finite DC gain
- Finite gm
- Output capacitance

Study effect on poles Q:

- define **Integrator quality factor (Q_{INT})**

Finite DC Gain

Neglect output/load capacitance (C_0=0), G_m is very large but the DC gain (G_mR_0) is finite and equal to A_0.

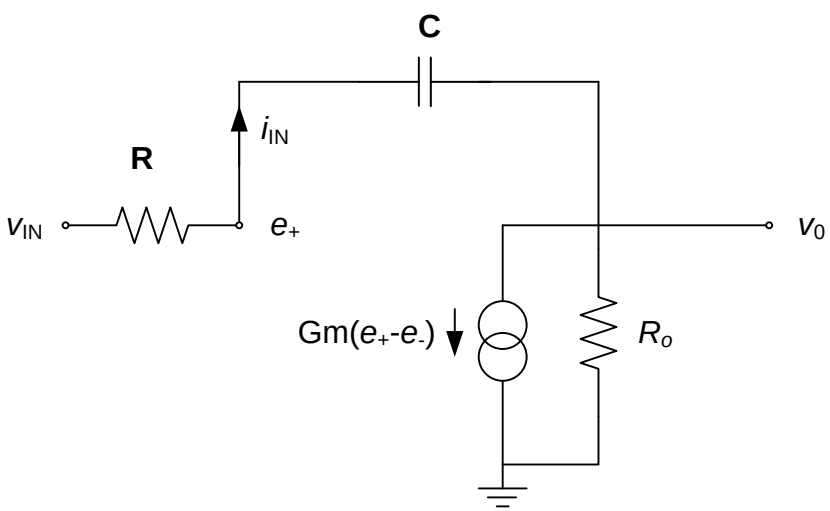

$$i_{IN} = \frac{v_{IN} - v_+}{R} = (v_+ - v_O)sC = G_m v_+ + \frac{v_O}{R_O}$$

$$-v_O\left(\frac{1}{R_O} + sC\right) = (G_m - sC)v_+$$

$$v_+ \xrightarrow[G_m \to \infty]{} -v_O\left(\frac{1}{A_O} + \frac{sC}{G_m}\right) = \frac{-v_O}{A_O}$$

$$\frac{v_{IN}}{sRC} = -v_O + v_+\left(1 + \frac{1}{sRC}\right)$$

$$\boxed{\frac{v_O}{v_{IN}} = \frac{-A_0}{1 + sRC(1 + A_0)}}$$

Finite DC Gain (2)

$$\frac{v_O}{v_{IN}} = \frac{-A_0}{1 + sRC(1 + A_0)}$$

AMPLITUDE

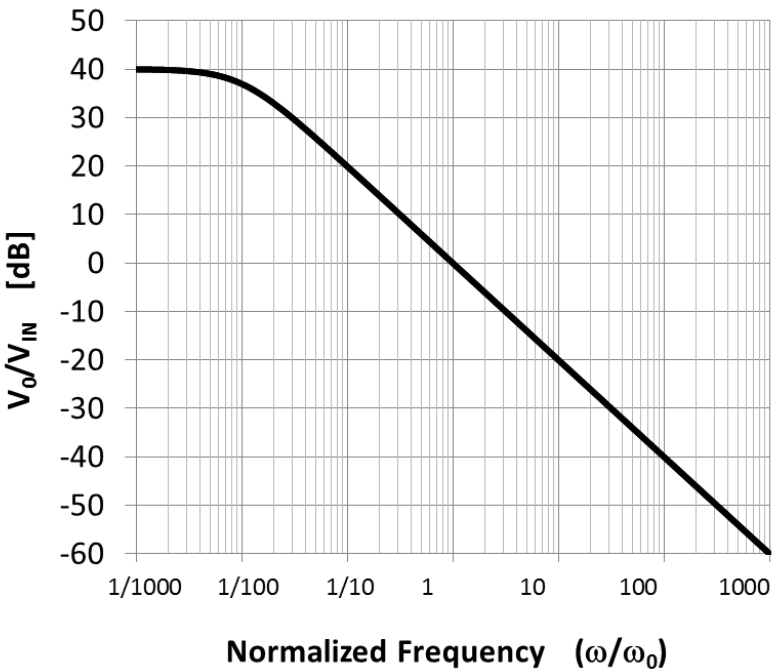

PHASE

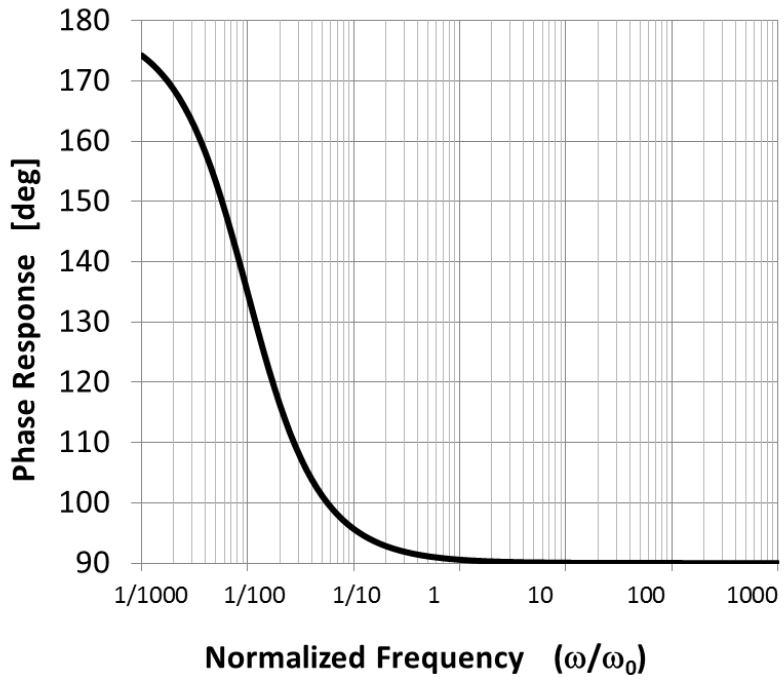

The effect of a finite OTA DC gain is to move the pole from the origin to $\omega = \omega_0 /(1+A_0)$.

Finite DC Gain (3)

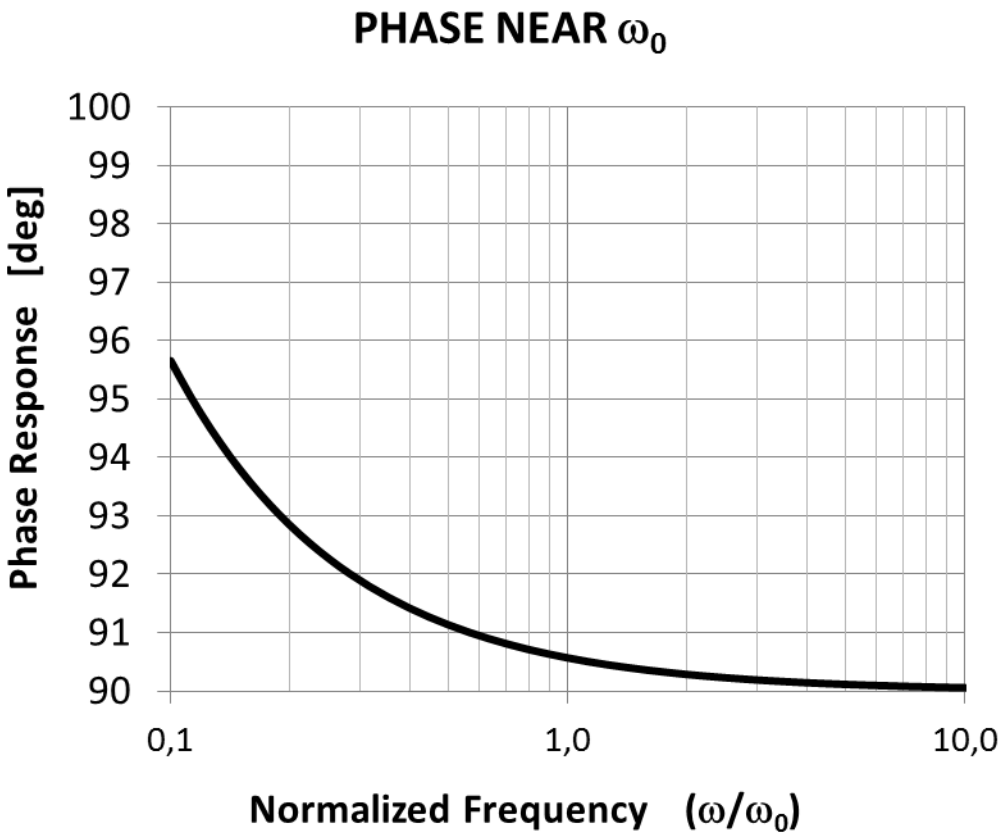

$$\frac{v_O}{v_{IN}} = \frac{-A_0}{1 + sRC\left(1 + A_0\right)}$$

$$\measuredangle \frac{v_O}{v_{IN}} = 180° - \arctan\left(\frac{\omega}{\omega_0}\left(1 + A_0\right)\right)$$

The effect of a finite OTA DC gain is to move the pole from the origin to $\omega = \omega_0 /(1+A_0)$. The phase shift at ω_0 is slightly larger than 90° (*phase lead*)

Finite Gm

Neglect output/load capacitance (C_0=0) and conductance: DC gain is infinite but G_m has a finite value.

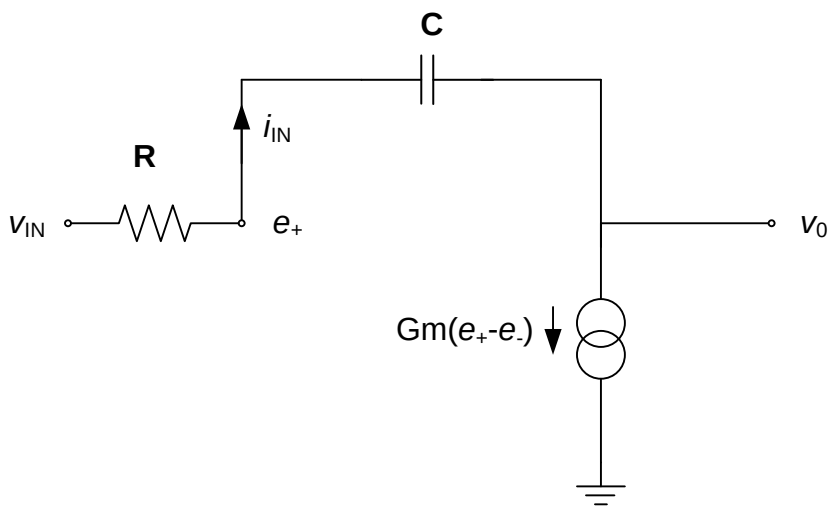

$$-v_O sC = \left(G_m - sC\right) v_+$$

$$v_O = -v_+ \left(1 - \frac{G_m}{sC}\right)$$

$$\frac{v_{IN}}{R} = v_+ \left(G_m + \frac{1}{R}\right)$$

$$i_{IN} = \frac{v_{IN} - v_+}{R} = \left(v_+ - v_O\right) sC = G_m v_+$$

$$\boxed{\frac{v_O}{v_{IN}} = \frac{-\left(1 - sC/G_m\right)}{sC\left(R + 1/G_m\right)}}$$

Finite Gm (2)

$$\frac{v_O}{v_{IN}} = \frac{-\left(1 - sC/G_m\right)}{sC\left(R + 1/G_m\right)}$$

AMPLITUDE

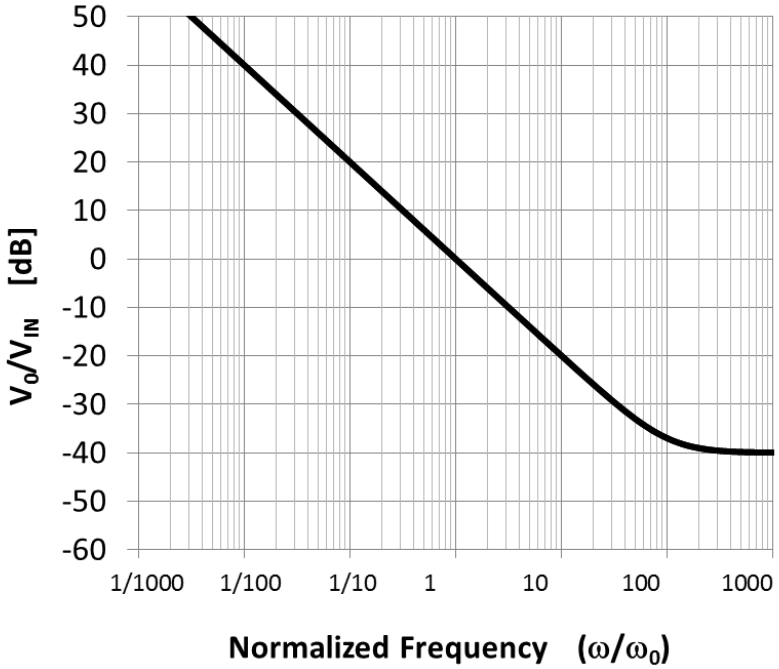

PHASE

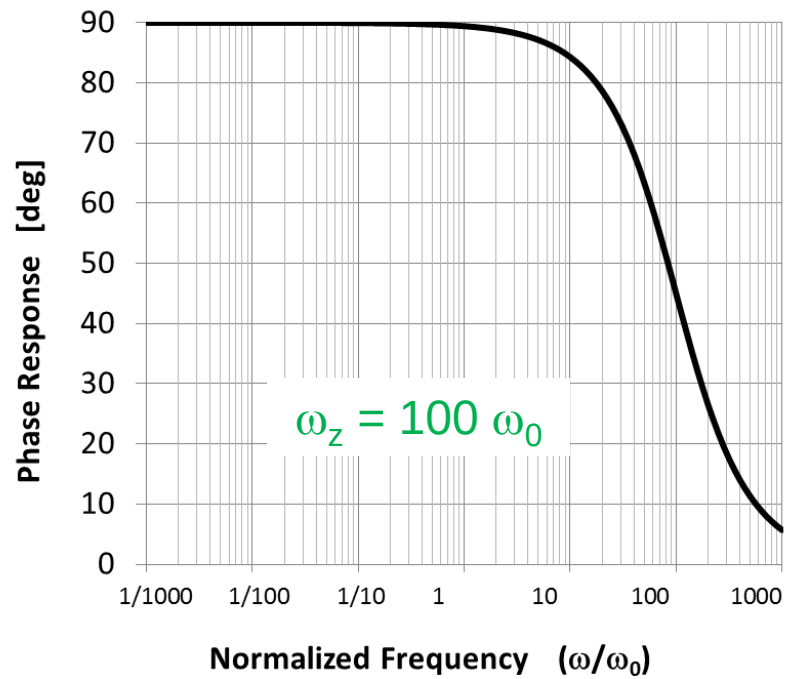

The effect of a finite G_m is to introduce a **RHP zero at G_m/C** and to move the unity gain frequency from 1/RC to $1/(R+1/G_m)C$.

Finite Gm (3)

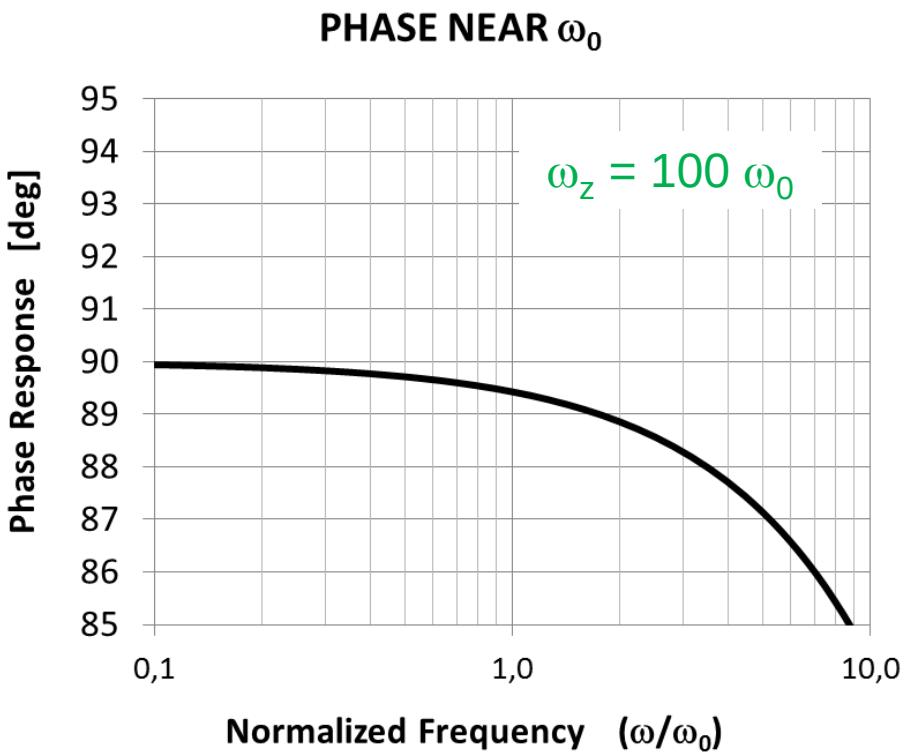

$$\frac{v_O}{v_{IN}} = \frac{-\left(1 - s/\omega_z\right)}{sC\left(R + 1/G_m\right)}$$

$$\measuredangle \frac{v_O}{v_{IN}} = 90° - \arctan\left(\frac{\omega}{\omega_z}\right)$$

$$\omega_z = G_m/C$$

The zero must be at a much higher frequency than ω_0 . The phase shift at ω_0 is slightly smaller than 90° (*phase lag*)

Finite Gain-Bandwidth Product (GBW)

Now consider a finite output/load capacitance C_0 and a finite G_m (GBW= G_mC_0). Neglect output conductance (infinite DC gain).

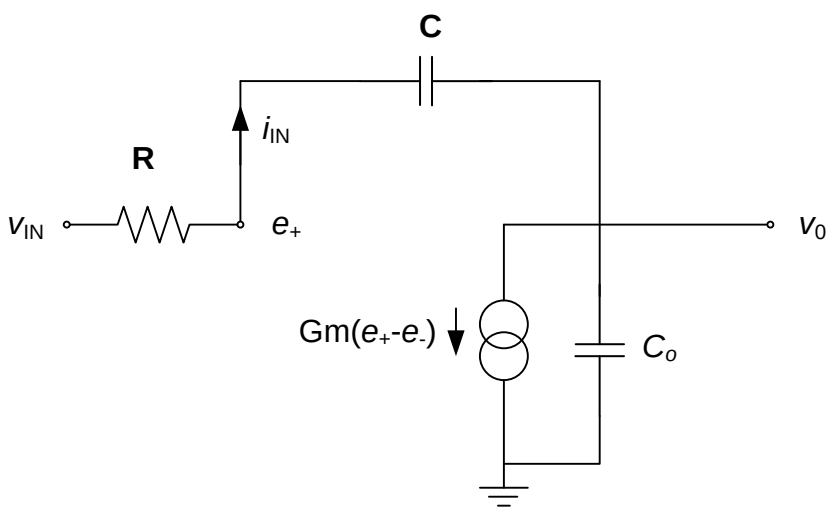

$$-v_O sC_{TOT} = \left(G_m - sC\right)v_+ \qquad C_{TOT} = C + C_O$$

$$\frac{v_{IN}}{sRC} = -v_O + v_+\left(1 + \frac{1}{sRC}\right)$$

$$\frac{v_{IN}}{sRC} = -v_O\left(1 + \frac{C_{TOT}}{G_m - sC}\frac{1+sRC}{sRC}\right)$$

$$i_{IN} = \frac{v_{IN} - v_+}{R} = \left(v_+ - v_O\right)sC = G_m v_+ + v_O sC_O$$

$$\frac{v_O}{v_{IN}} = \frac{-1}{sR\alpha C}\frac{1 - sC/G_m}{1 + sC_O/\left(\alpha G_m\right)}$$

$$\alpha = 1 + \frac{1 + C_O/C}{G_m R}$$

Finite GBW (2)

$$\frac{v_O}{v_{IN}} = \frac{-1}{sR\alpha C}\frac{1 - sC/G_m}{1 + sC_O/(\alpha G_m)}$$

AMPLITUDE

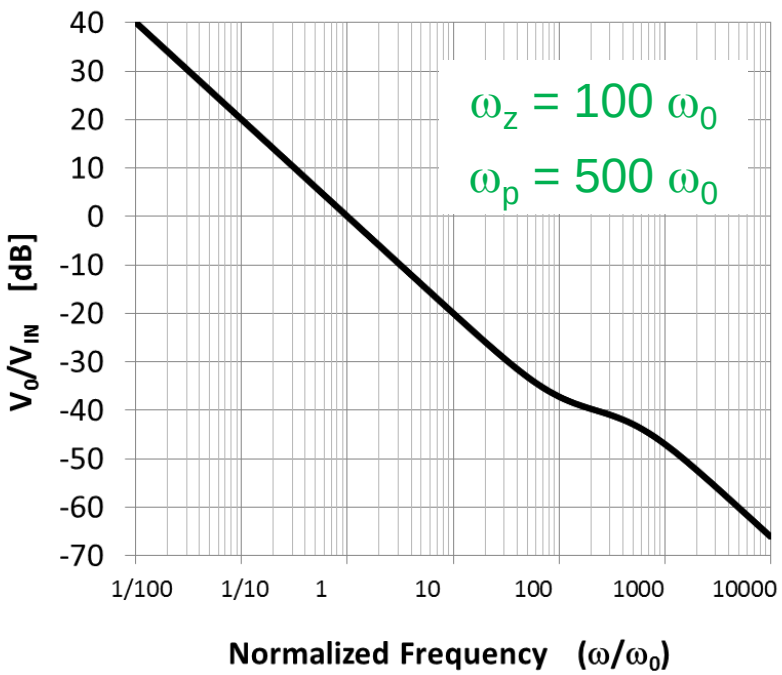

PHASE

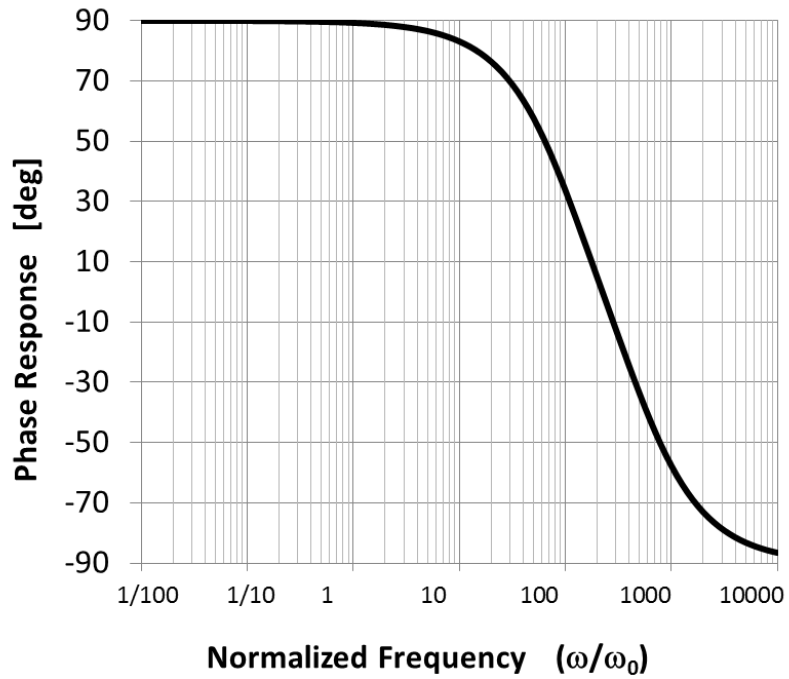

The effect of a finite GBW is to introduce an **additional pole at approximately -G_m /C_O**. The unity gain frequency is also slightly increased.

Finite GBW (3)

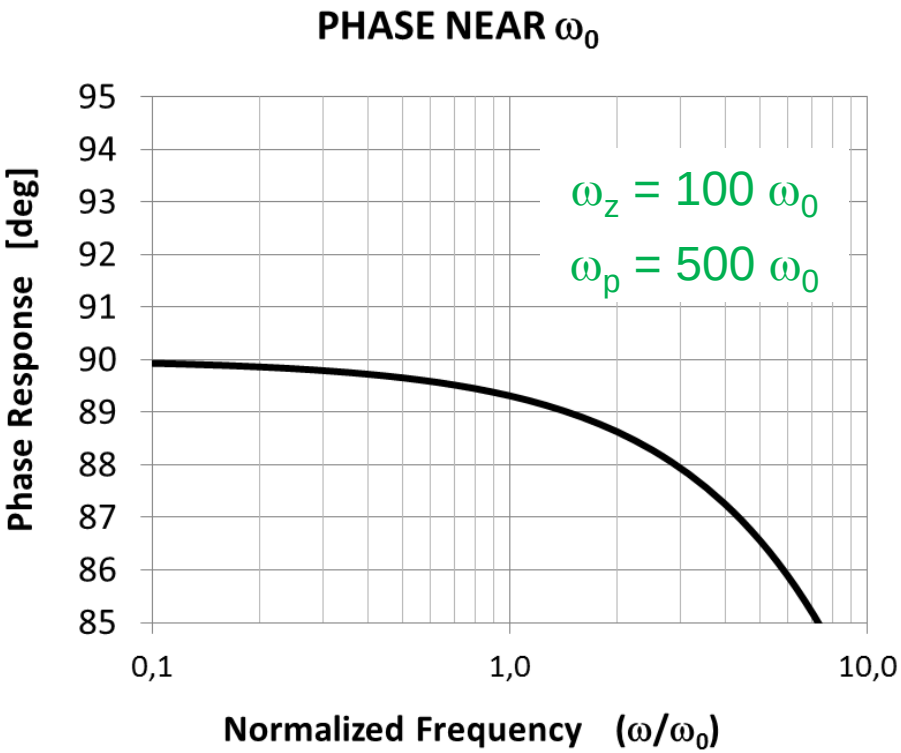

$$\frac{v_O}{v_{IN}} = \frac{-1}{sR\alpha C}\frac{1-s/\omega_z}{1+s/\omega_p}$$

$$\measuredangle \frac{v_O}{v_{IN}} = 90° - \arctan\left(\frac{\omega}{\omega_z}\right) - \arctan\left(\frac{\omega}{\omega_p}\right)$$

$\omega_z = G_m/C$

$\omega_p = \alpha G_m/C_O$

The phase shift at ω_0 is slightly smaller than 90° (*phase lag*).
The pole and the RHP zero both contribute a phase lag

Integrator Quality Factor (Q_{INT})

The cumulative effect of integrator non-idealities on the poles can be summarized in a single number: $\mathbf{Q_{INT}}$

Q_{INT} is a measure of the integrator phase deviations from 90° at the unity gain frequency.

DEFINITION

$$\Phi = \measuredangle H\left(j\omega_0\right)$$

$$Q_{INT} \triangleq \tan\left(-\Phi\right) = \frac{1}{\tan\left(90° - \Phi\right)}$$

H. Khorramabadi and P. R. Gray, “High-frequency CMOS continuous time filters,” *JSSC* Dec 1984.

Integrator Quality Factor: Q_{INT}

Ideal integrator

$$H(j\omega) = \frac{1}{j\omega/\omega_0}$$

$$\Phi(\omega) = -\pi/2$$

$$\boxed{Q_{INT} = \infty}$$

Real integrator

$$H(j\omega) = \frac{1}{R(\omega) + jX(\omega)}$$

$$H(j\omega) = |H(j\omega)| e^{j\Phi(\omega)}$$

$$\Phi(\omega) = -\arctan\left(\frac{X(\omega)}{R(\omega)}\right)$$

$$\boxed{Q_{INT} \triangleq \frac{X(\omega_0)}{R(\omega_0)}} = \tan(-\Phi) = \frac{1}{\tan(90° + \Phi)}$$

This alternative definition may be easier to remember.

Summary

- **Finite DC Gain**

$$\frac{v_O}{v_{IN}} = \frac{-A_0}{1+sRC\left(1+A_0\right)} \qquad Q_{INT} \triangleq \frac{X\left(\omega_0\right)}{R\left(\omega_0\right)} = 1+A_0$$

- **Finite Gm** (RHP zero $\omega_z = G_m/C$)

$$\frac{v_O}{v_{IN}} = \frac{-\left(1-s/\omega_z\right)}{sC\left(R+1/G_m\right)} \qquad \frac{X\left(\omega_0\right)}{R\left(\omega_0\right)} = \frac{-1/\omega_0}{1/\omega_z} \qquad Q_{INT} = \frac{-\omega_z}{\omega_0} < 0$$

- **Finite GBW** (additional pole)

$$\frac{v_O}{v_{IN}} = \frac{-\omega_0}{s}\frac{1}{1+s/\omega_p} \qquad \frac{X\left(\omega_0\right)}{R\left(\omega_0\right)} = \frac{1}{-\omega_0/\omega_p} \qquad Q_{INT} = \frac{-\omega_p}{\omega_0} < 0$$

Summary (2)

$$Q_{INT} = \frac{1}{\frac{1}{1+A_0} - \frac{\omega_0}{\omega_z} - \frac{\omega_0}{\omega_p}}$$

- Finite DC Gain gives a positive Q. Right half-plane zero (such as introduced by the finite Gm) and additional poles (such as introduced by load capacitance) introduce a negative Q.
- The two effects partially cancel each other but ensuring complete cancellation across process variations is not trivial.
- Design guidelines: large DC gain, ensure that zeros and poles are well above the poles frequency

Biquad with Finite Integrator Q

- If a biquad is realized using integrators having finite Q_{INT}, the poles Q_P will be modified as follows:

$$Q'_P = \frac{Q_P}{1 + \frac{2Q_P}{Q_{INT}}}$$

Q_{INT} >0

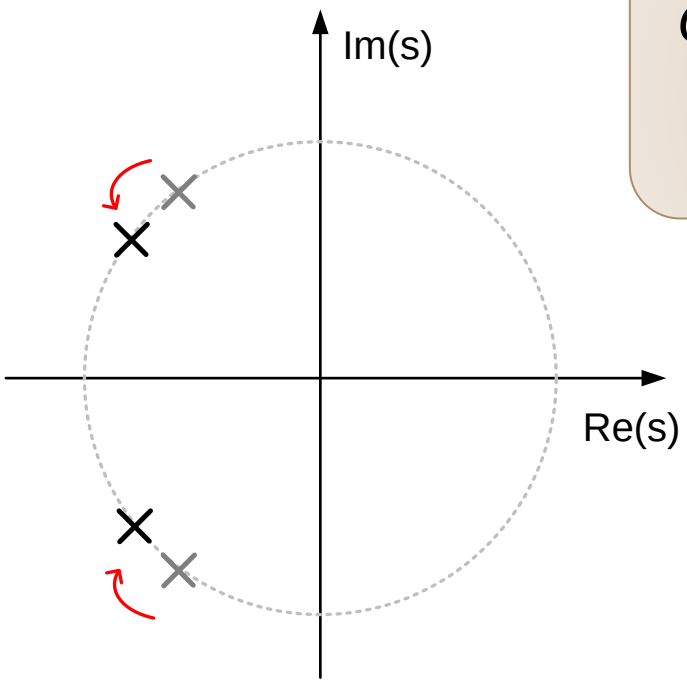

Q_{INT} <0

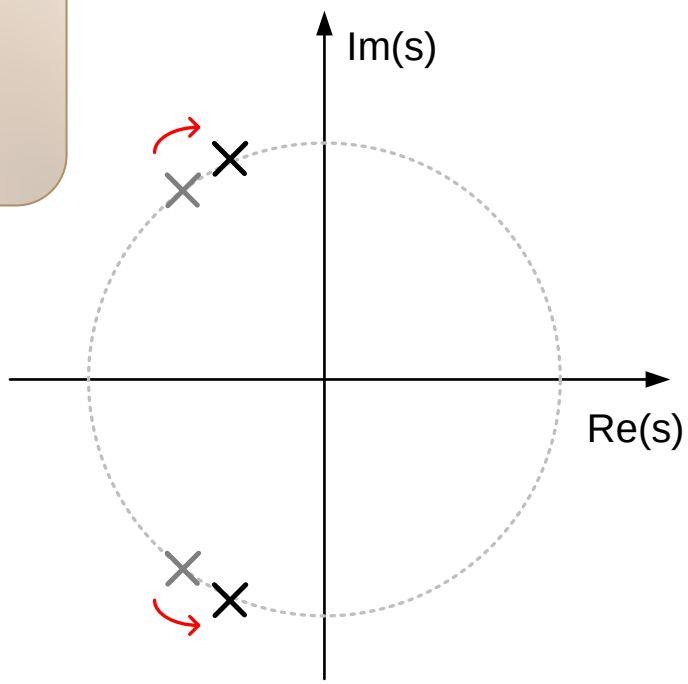

Q_{INT} must be much higher than the poles Q to preserve the filter shape

Biquad with Finite Integrator Q (2)

- If a biquad is realized using integrators having finite Q_{INT}, the biquad transfer function will be modified as follows:

$$H'_{LP}(\omega_0) = \frac{H_{LP}(\omega_0)}{1 + \frac{2Q_P}{Q_{INT}}}$$

- If the error on the gain of the biquad at the pole frequency is to be lower than α_{ERR} , a specification on the minimum Q_{INT} is derived:

$$Q_{INT} = \frac{2Q_P}{10^{\pm\alpha_{ERR,dB}/20} - 1}$$

- Notice that the above considerations apply to ***any pair of poles*** of the filter transfer function, ***independent of the filter implementation*** (i.e. even if the filter is implemented as a ladder)

W.J.A. De Heij, E. Seevinck, and K. Hoen, “Practical Formulation of the Relation Between Filter Specifications and the Requirements for Integrator Circuits,” TCAS Aug 1989.

Two-Integrators Biquad Design

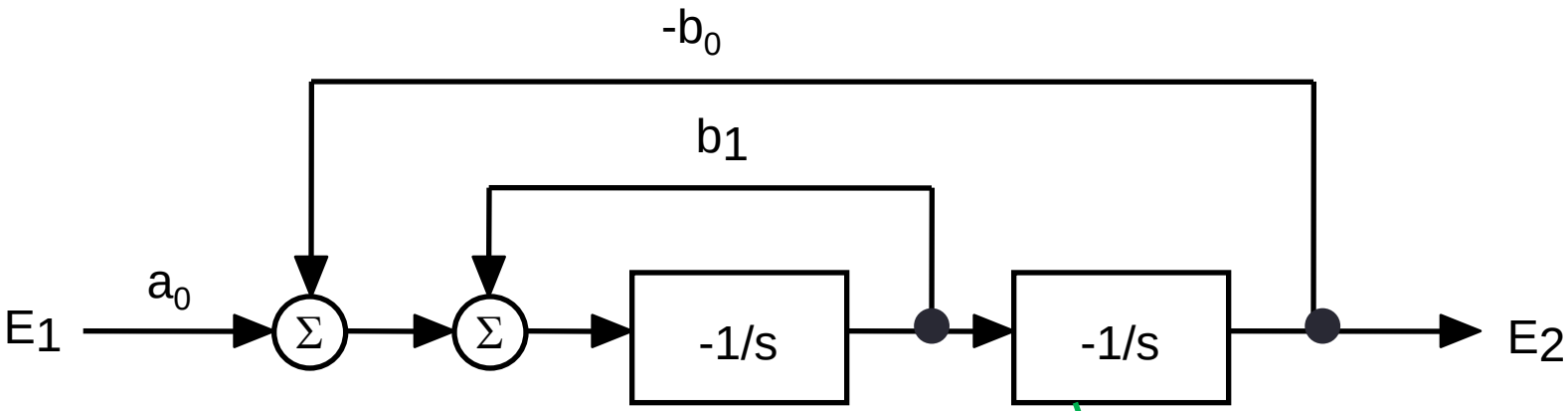

$$b_1 = \frac{\omega_0}{Q_P} \qquad a_0 = b_0 = \omega_0^2$$

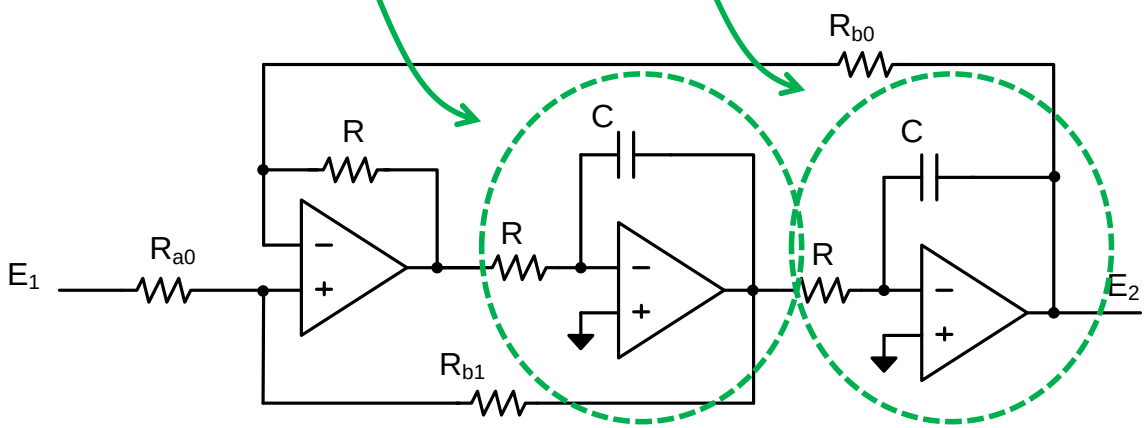

$$\frac{E_2}{E_1} = \frac{a_0}{s^2 + b_1 s + b_0}$$

Integrator Non-Idealitities

The effect of integrator non-idealities will be evaluated using the modified integrator transfer function $H_{INT}(s)$

$$a_0 = b_0 = \omega_0^2$$

$$b_1 = \frac{\omega_0}{Q_P}$$

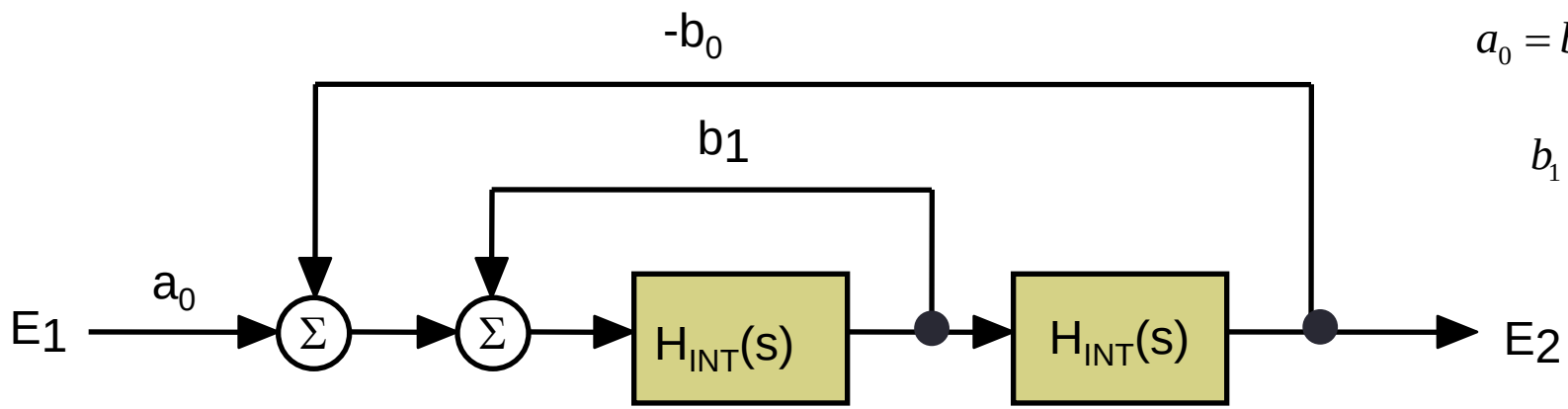

$$H(s) = \frac{a_0 H_{INT}^2(s)}{1 - b_1 H_{INT}(s) + b_0 H_{INT}^2(s)}$$

$H_{INT}(s)$

- **Finite DC Gain** $\dfrac{-1}{\dfrac{\omega_0}{1+A_0} + s}$
- **RHP zero** $\dfrac{-1}{s}(1 - s/\omega_z)$
- **Finite GBW** (additional pole) $\dfrac{-1}{s}\dfrac{1}{1 + s/\omega_p}$

Finite DC Gain

$$H_{INT} = \frac{-1}{1/(1+A_0) + s/\omega_0}$$

$$b_1 = \frac{\omega_0}{Q_P} \qquad b_0 = \omega_0^2$$

$$H(s) = \frac{a_0 H_{INT}^2(s)}{1 - b_1 H_{INT}(s) + b_0 H_{INT}^2(s)}$$

$$H(s) = \frac{1}{s^2 + s\left(\frac{\omega_0}{Q_P} + \frac{2\omega_0}{1+A_0}\right) + \omega_0^2\left(1 + \frac{1}{Q_P(1+A_0)} + \frac{1}{(1+A_0)^2}\right)}$$

$$\omega'_0 = \omega_0\sqrt{1 + \frac{1}{Q_P(1+A_0)} + \frac{1}{(1+A_0)^2}} \cong \frac{\omega_0}{1 - \frac{1}{2Q_P(1+A_0)}}$$

Assuming $A_0 >> 1$

$$Q'_P \cong \frac{Q_P}{1 + \frac{2Q_P}{1+A_0}} = \frac{Q_P}{1 + \frac{2Q_P}{Q_{INT}}}$$

$$Q_{INT} = 1 + A_0$$

RHP Zero

$$H_{INT}(s) = \frac{-1}{s}(1 - s/\omega_z)$$

$$b_1 = \frac{\omega_0}{Q_P} \qquad b_0 = \omega_0^2$$

$$H(s) = \frac{a_0 H_{INT}^2(s)}{1 - b_1 H_{INT}(s) + b_0 H_{INT}^2(s)}$$

$$H(s) = \frac{\omega_0^2 (1 - s/\omega_z)^2}{s^2\left(1 - \frac{\omega_0}{Q_P \omega_z} + \frac{\omega_0^2}{\omega_z^2}\right) + s\left(\frac{\omega_0}{Q_P} - 2\frac{\omega_0^2}{\omega_z}\right) + \omega_0^2}$$

$$\omega'_0 = \frac{\omega_0}{\sqrt{1 - \frac{\omega_0}{Q_P \omega_z} + \frac{\omega_0^2}{\omega_z^2}}} \cong \frac{\omega_0}{1 + \frac{\omega_0}{2 Q_P \omega_z}}$$

Assuming $\omega_z >> \omega_0$

$$Q'_P \cong \frac{Q_P}{1 - \frac{2 Q_P \omega_0}{\omega_z}} = \frac{Q_P}{1 + \frac{2 Q_P}{Q_{INT}}}$$

$$Q_{INT} = -\frac{\omega_z}{\omega_0}$$

Finite GBW

$$H_{INT}(s) = \frac{-1}{s\left(1 + s/\omega_p\right)}$$

$$b_1 = \frac{\omega_0}{Q_P} \qquad b_0 = \omega_0^2$$

$$H(s) = \frac{a_0 H_{INT}^2(s)}{1 - b_1 H_{INT}(s) + b_0 H_{INT}^2(s)}$$

$$H(s) \cong \frac{1}{\left(1 + s/\omega_p\right)^2} \frac{\omega_0^2}{s^2 + s\dfrac{\omega_0}{Q'_P} + \omega_0^2}$$

$$Q'_P \cong \frac{Q_P}{1 - \dfrac{2Q_P\omega_0}{\omega_p}} = \frac{Q_P}{1 + \dfrac{2Q_P}{Q_{INT}}}$$

Assuming
$\omega_p >> \omega_0$

$$Q_{INT} = -\frac{\omega_p}{\omega_0}$$

Summary

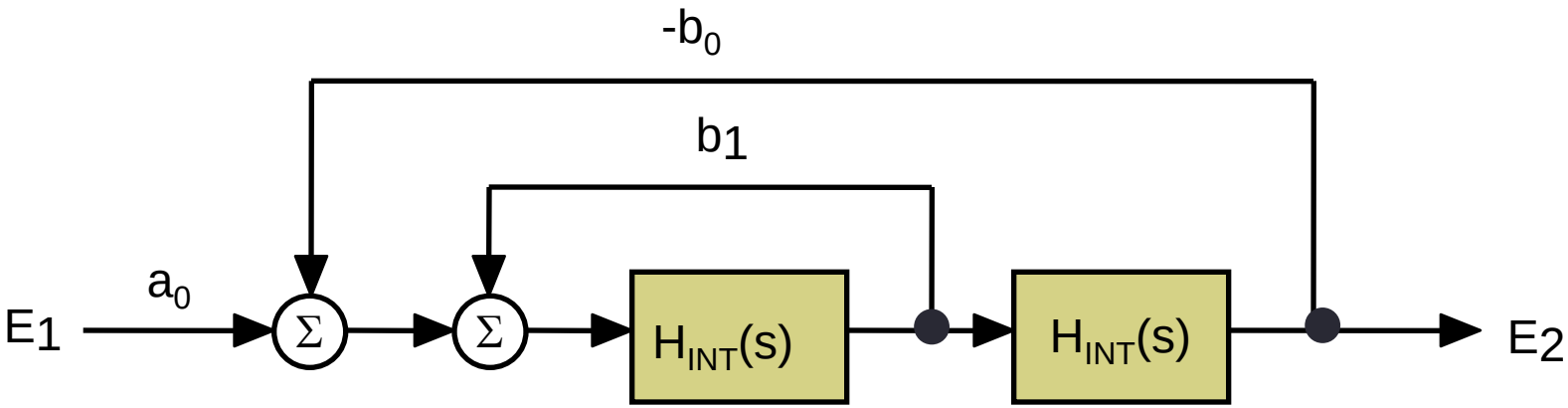

The effect of integrator non-idealities on the poles Q is: $Q'_P = \dfrac{Q_P}{1+\dfrac{2Q_P}{Q_{INT}}}$

- **Finite DC Gain** $H_{INT} = \dfrac{-1}{1/(1+A_0)+s/\omega_0}$ ⇒ $Q_{INT} = 1 + A_0$
- **Finite Gm** (RHP zero) $H_{INT}(s) = \dfrac{-1}{s}(1 - s/\omega_z)$ ⇒ $Q_{INT} = -\dfrac{\omega_z}{\omega_0}$
- **Finite GBW** (additional pole) $H_{INT}(s) = \dfrac{-1}{s(1+s/\omega_p)}$ ⇒ $Q_{INT} = -\dfrac{\omega_p}{\omega_0}$

HIGHER ORDER OPAMP-RC FILTERS

Canonic Synthesis

Multiple-Loop Feedback Architectures

- As the filter order increases, the Q of the poles increases and biquad based implementations become too sensitive to components variations and mismatches.
- **Multiple-loop feedback architectures** are to be preferred due to **lower sensitivity**
- **The state-variable synthesis method** allows the synthesis of an nth order filter (low-pass, band-pass or high-pass) in the form

$$\frac{E_n}{E_1} = \frac{a_{n-1}s^{n-1} + \ldots + a_2 s^2 + a_1 s + a_0}{s^n + b_{n-1}s^{n-1} + \ldots + b_2 s^2 + b_1 s + b_0}$$

State-Variable Method: All-pole filters

$$\frac{E_n}{E_1} = \frac{a_0}{s^n + b_{n-1}s^{n-1} + \ldots + b_2 s^2 + b_1 s + b_0}$$

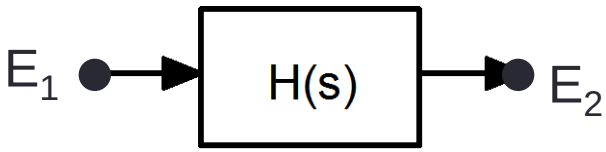

$$\left(s^n + b_{n-1}s^{n-1} + \ldots + b_2 s^2 + b_1 s + b_0\right)E_2 = a_0 E_1$$

$$\left(s^n + b_{n-1}s^{n-1} + \ldots + b_2 s^2 + b_1 s + b_0\right)E_2 = E_3$$

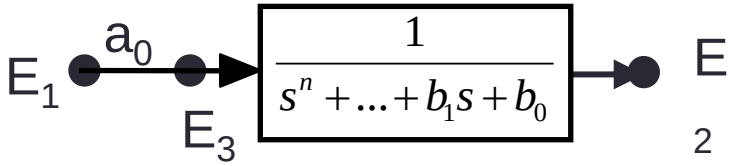

$$\left(s^n + b_{n-1}s^{n-1} + \ldots + b_2 s^2 + b_1 s\right)E_2 + b_0 E_2 = E_3$$

$$\left(s^n + b_{n-1}s^{n-1} + \ldots + b_2 s^2 + b_1 s\right)E_2 = \underbrace{E_3 - b_0 E_2}$$

$$s\left(s^{n-1} + b_{n-1}s^{n-2} + \ldots + b_2 s + b_1\right)E_2 = E_4$$

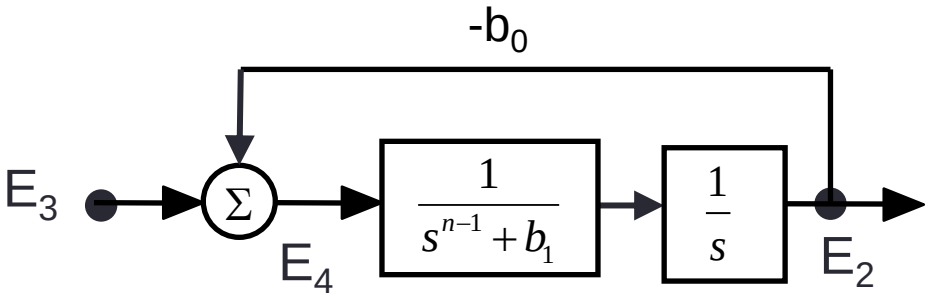

Controller Canonic Form Realization

Follow-the-leader feedback architecture

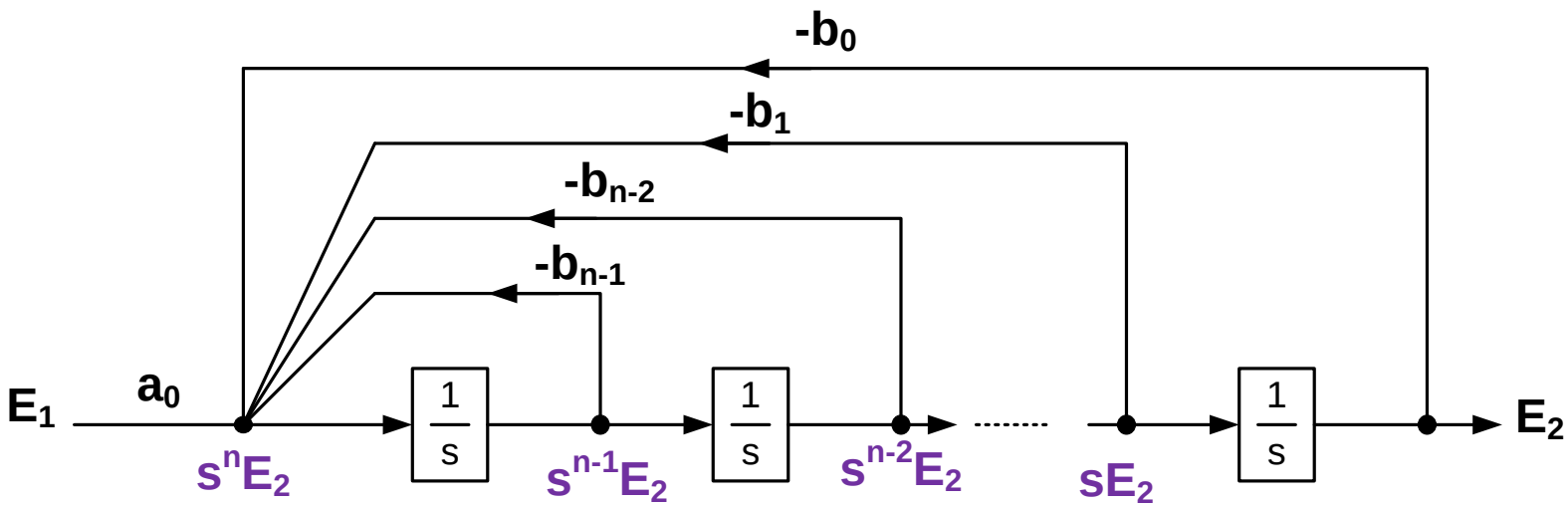

$$\frac{E_n}{E_1} = \frac{a_0}{s^n + b_{n-1}s^{n-1} + \ldots + b_2 s^2 + b_1 s + b_0}$$

K. Laker, M. Ghausi, "Synthesis of a low-sensitivity multiloop feedback active RC filter," IEEE Transactions on Circuits and Systems, Mar 1974

Inverting Integrators Realization

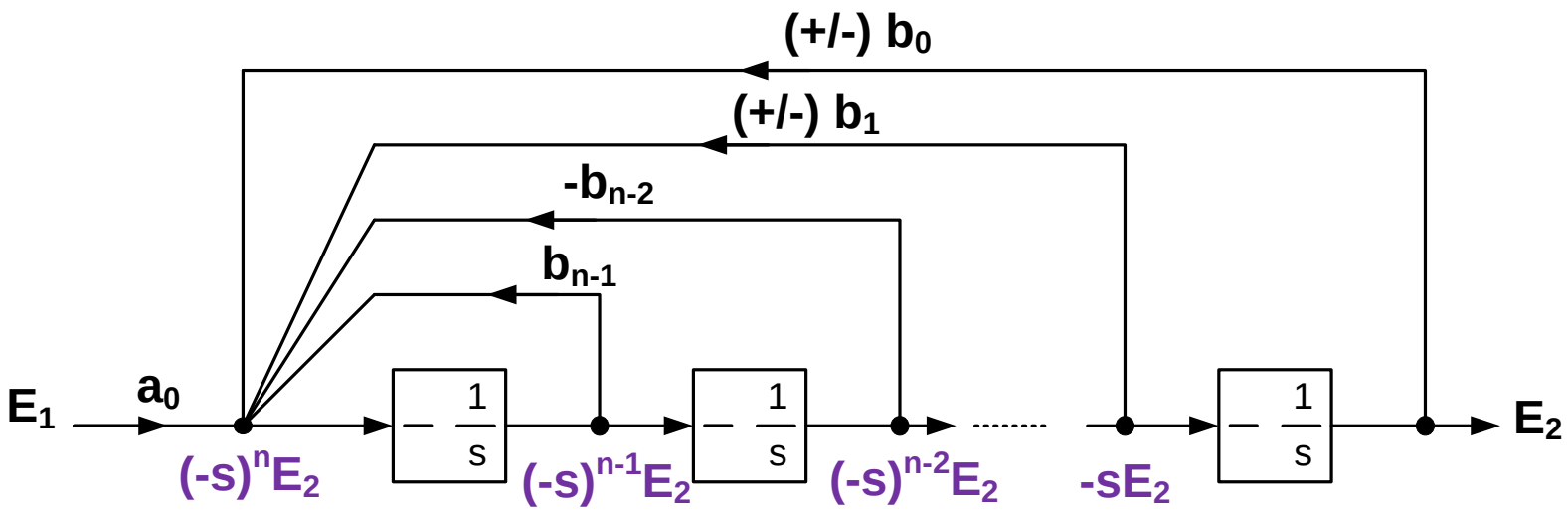

$$\frac{E_n}{E_1} = \frac{a_0}{s^n + b_{n-1}s^{n-1} + \ldots + b_2 s^2 + b_1 s + b_0}$$

Inverse Follow-the-Leader Feedback

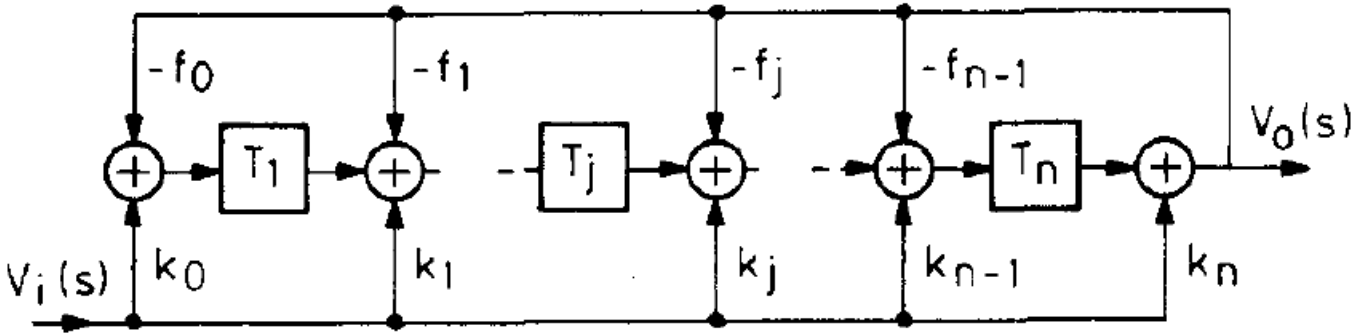

Circuit Realization Example

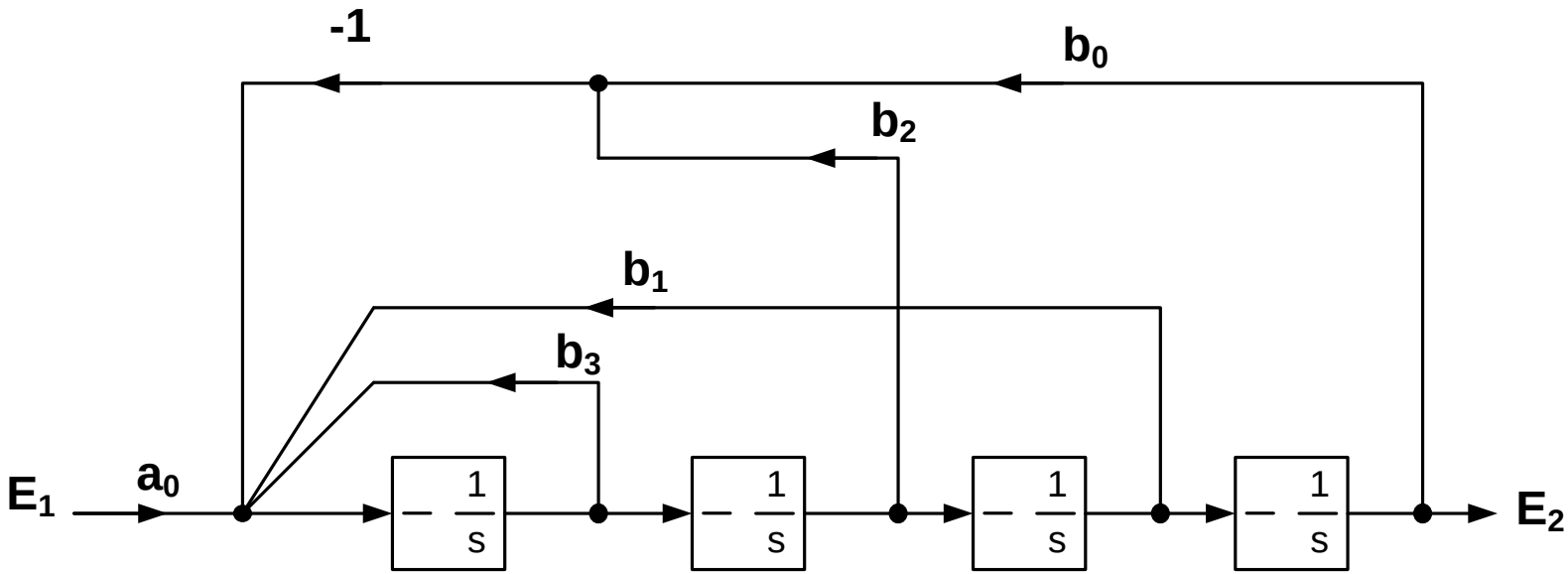

$$\frac{E_2}{E_1} = \frac{0.2756}{s^4 + 0.9528s^3 + 1.4539s^2 + 0.7426s + 0.2756}$$

Circuit Realization Example (ii)

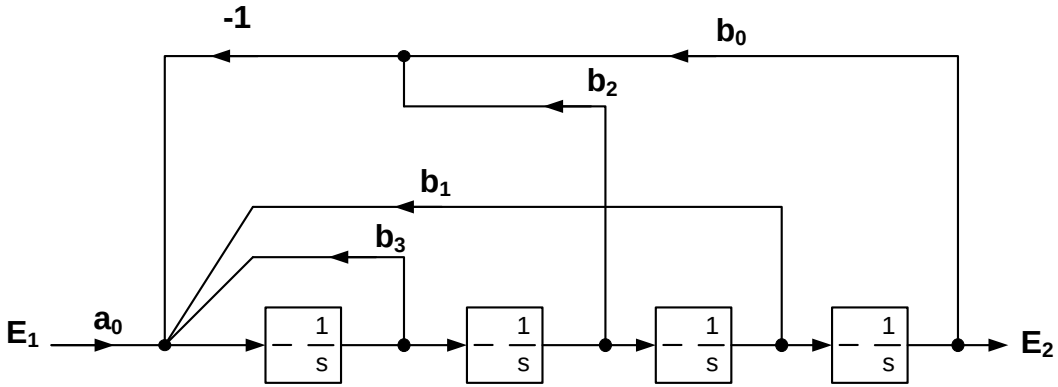

The feedback resistors are inversely proportional to the corresponding coefficient:

Ri=1/bi

$$\frac{E_2}{E_1} = \frac{0.2756}{s^4 + 0.9528s^3 + 1.4539s^2 + 0.7426s + 0.2756}$$

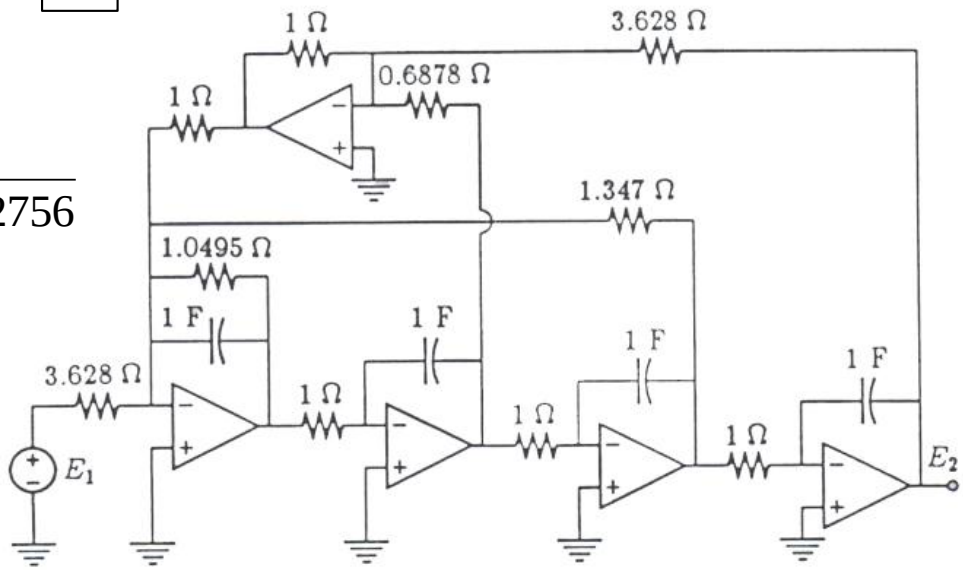

General Realization

$$\frac{E_n}{E_1} = \frac{a_{n-1}s^{n-1} + \ldots + a_2 s^2 + a_1 s + a_0}{s^n + b_{n-1}s^{n-1} + \ldots + b_2 s^2 + b_1 s + b_0}$$

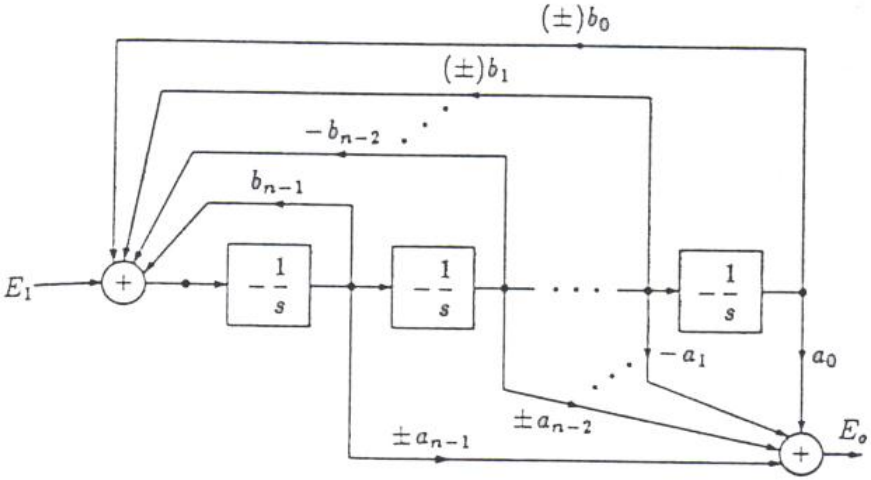

- Realization of a generic transfer function with number of zeros strictly lower than the number of poles
  - The realization with equal number of poles and zeros is only slightly more complicated

Filter Design Steps

Design specification
↓
Normalization
↓
Approximation
↓
Network Function
↓
Realization
↓
Denormalization

FILTER MASK

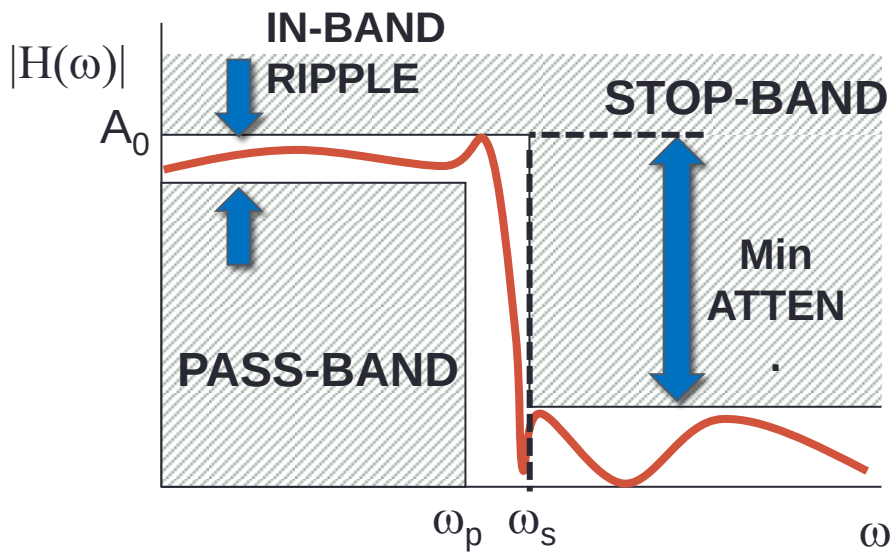

Example 3

- Design a 5th order all-pole low-pass filter using follow-the-leader feedback architecture
- DC gain = 0dB
- Chebyshev, 5th order, ε=0.509, ω_0=1MHz

$$\frac{V_{OUT}}{V_{IN}} = \frac{a_0}{s^5 + b_4 s^4 + b_3 s^3 + b_2 s^2 + b_1 s + b_0}$$

Design Example of a Chebyshev Filter

- 5th order, ε=0.5088

$$v = \frac{1}{n}\sinh^{-1}\left[\frac{1}{\varepsilon}\right] \qquad u = \frac{(2k-1)\pi}{2n} \qquad s_k = \sigma_k + j\omega_k = \sin\left[\frac{(2k-1)\pi}{2n}\right]\sinh v + j\cos\left[\frac{(2k-1)\pi}{2n}\right]\cosh v$$

- ν = (1/5) $\sinh^{-1}$(1/0.5088) = 0.2856
- Sinh ν = 0.2895 ; Cosh ν = 1.041
- Normalized poles:
- k=1 σ_1= sin(π/10) x 0.2895 = 0.0895; ω_1= cos(π/10) x 1.041 = 0.99
- $\omega_{P1} = (\sigma_1^2 + \omega_1^2)^{1/2}$ =0.994; $Q_1 = \omega_{P1}/(2\,\sigma_1)$ = 5.556
- k=2 σ_2= sin(3π/10) x 0.2895 = 0.234; ω_1= cos(3π/10) x 1.041 = 0.612
- $\omega_{P2} = (\sigma_2^2 + \omega_2^2)^{1/2}$ =0.655; $Q_2 = \omega_{P2}/(2\,\sigma_2)$ = 1.4
- k=3 σ_1= sin(5π/10) x 0.2895 = 0.2895; ω_1= cos(5π/10) x 1.041 = 0
- ω_{P3} = 0.2894

$$D(s) = \left(s^2 + \frac{s\omega_{P1}}{Q_{P1}} + \omega_{P1}^2\right)\left(s^2 + \frac{s\omega_{P2}}{Q_{P2}} + \omega_{P2}^2\right)\left(s + \omega_{P3}\right)$$

Design Example of a Chebyshev Filter

$$D(s)=\left(s^2+\frac{s\omega_{P1}}{Q_{P1}}+\omega_{P1}^2\right)\left(s^2+\frac{s\omega_{P2}}{Q_{P2}}+\omega_{P2}^2\right)\left(s+\omega_{P3}\right)$$

- Calculate the normalized polynomial coefficients:

$$D(s)=s^5+b_4s^4+b_3s^3+b_2s^2+b_1s+b_0$$

$$b_4=\omega_{P3}+\frac{\omega_{P1}}{Q_{P1}}+\frac{\omega_{P2}}{Q_{P2}}$$

$$b_1=\omega_{P3}\left(\frac{\omega_{P1}\omega_{P2}^2}{Q_{P1}}+\frac{\omega_{P2}\omega_{P1}^2}{Q_{P2}}\right)+\omega_{P1}^2\omega_{P2}^2$$

$$b_3=\omega_{P1}^2+\omega_{P2}^2+\frac{\omega_{P1}\omega_{P2}}{Q_{P1}Q_{P2}}+\frac{\omega_{P3}\omega_{P1}}{Q_{P1}}+\frac{\omega_{P3}\omega_{P2}}{Q_{P2}}$$

$$b_0=\omega_{P3}\omega_{P1}^2\omega_{P2}^2$$

$$b_2=\omega_{P3}\left(\omega_{P1}^2+\omega_{P2}^2+\frac{\omega_{P1}\omega_{P2}}{Q_{P1}Q_{P2}}\right)+\frac{\omega_{P2}\omega_{P1}^2}{Q_{P2}}+\frac{\omega_{P1}\omega_{P2}^2}{Q_{P1}}$$

Flowgraph

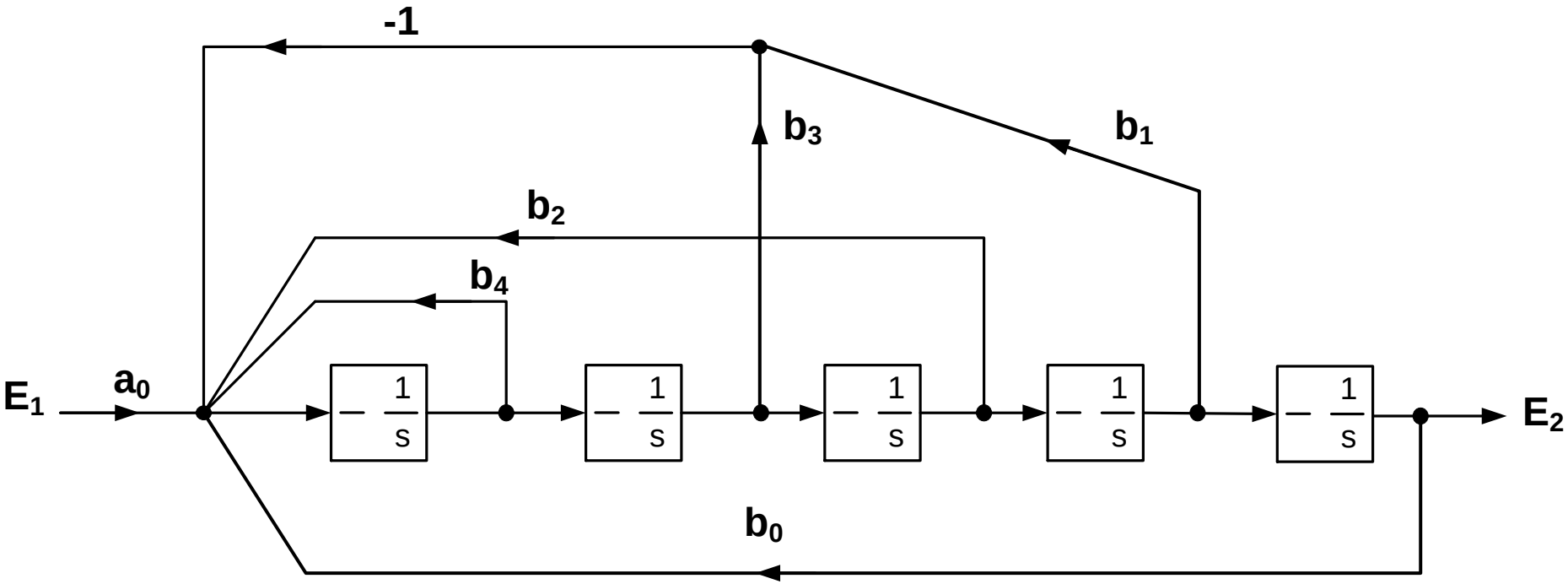

To de-normalize the coefficients:

$b'_k = b_k\, \omega_0^{5-k}$

If we substitute the integrators with 1/(sRC), the feedback coefficients are changed as follows: $b''_k = b_k (RC\omega_0)^{5-k}$

Circuit Implementation

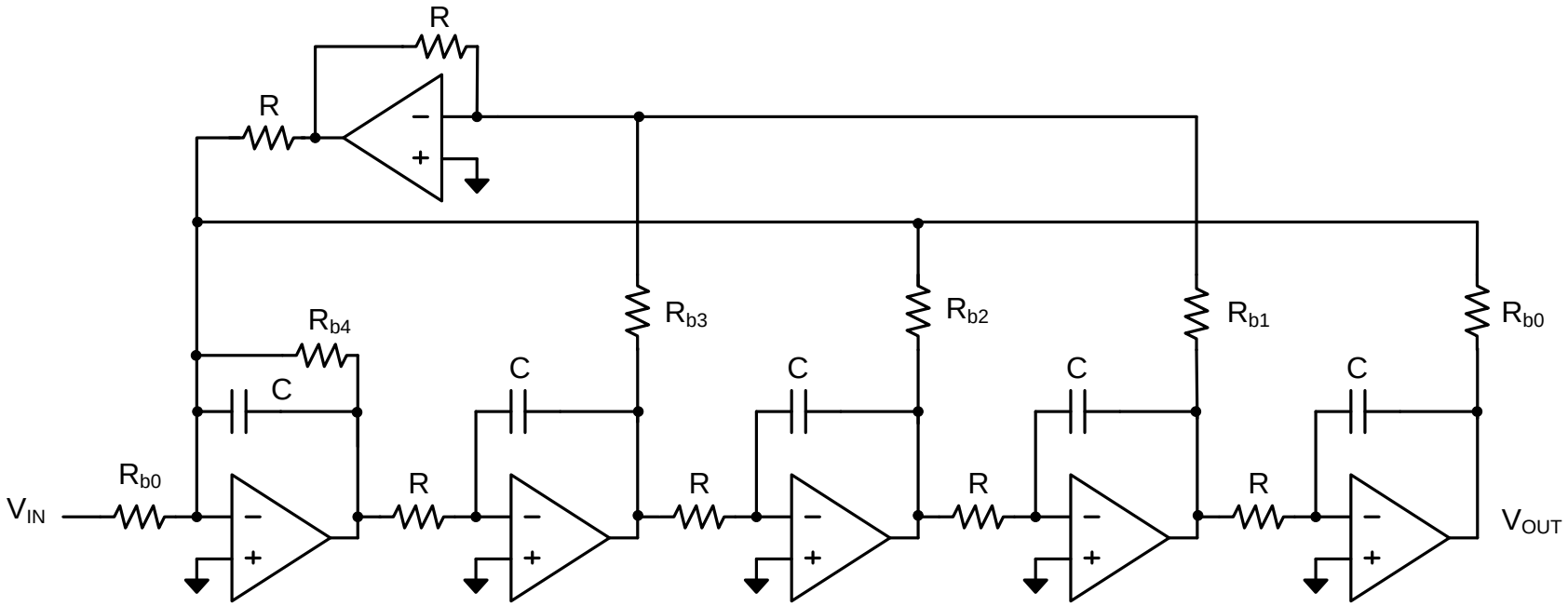

$$\omega_0 = \frac{1}{RC} \quad \Rightarrow \quad b''_k = b_k \qquad R_{bk} = \frac{R}{b_k}$$

BACKUP SLIDES

MATERIALE INTEGRATIVO

Pole Quality Factor

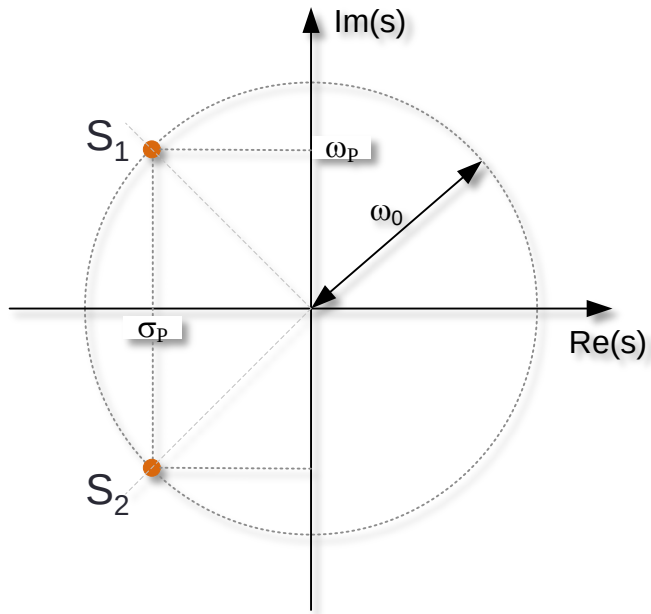

$$Q = \frac{\omega_0}{-2\sigma_p}$$

The solutions of D(s)=0 (i.e. the poles of the network function) are complex numbers, typically represented in the S plane.

$$s_p = \sigma_p + j\omega_p$$

Solutions s_k can be real or complex. Complex solutions always appear in conjugate pairs.

A very important design parameter is the pole quality factor Q.

The pole quality factor is given by the ratio between the pole frequency (distance from the origin in the s-plane) and the real part (distance from the imaginary axis in the s-plane)

Biquad Magnitude Response

Two conjugate poles at ω_0

$$H(s) = \frac{1}{1 + s/(Q\omega_0) + (s/\omega_0)^2}$$

Frequency response at ω_0

$$\boxed{H(j\omega_0) = -jQ}$$

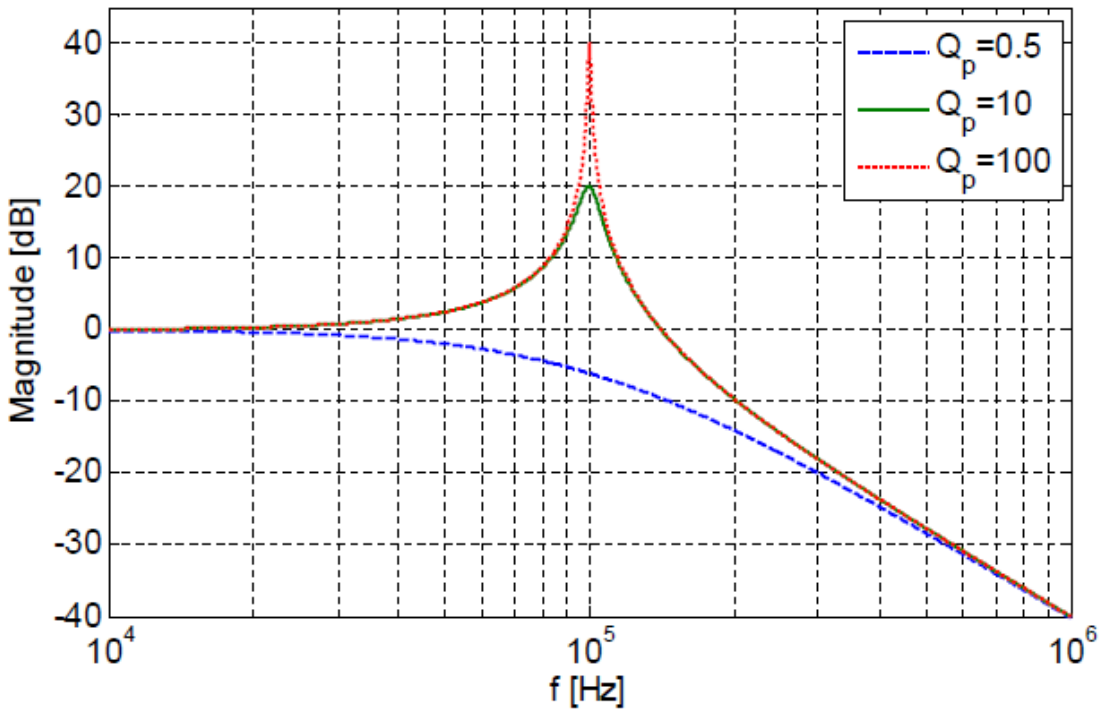

Notice how the network function has been written, with explicit reference to ω_0 and Q. This is usually done in biquad-based filter design since it greatly simplifies the design procedure.

Biquad Phase Response

$$H(s) = \frac{1}{1 + s/(Q\omega_0) + (s/\omega_0)^2}$$

$$\varphi = -arctan\left(\frac{\omega\omega_0}{Q({\omega_0}^2 - \omega^2)}\right)$$

$\phi(j\omega_0)=-\pi/2$

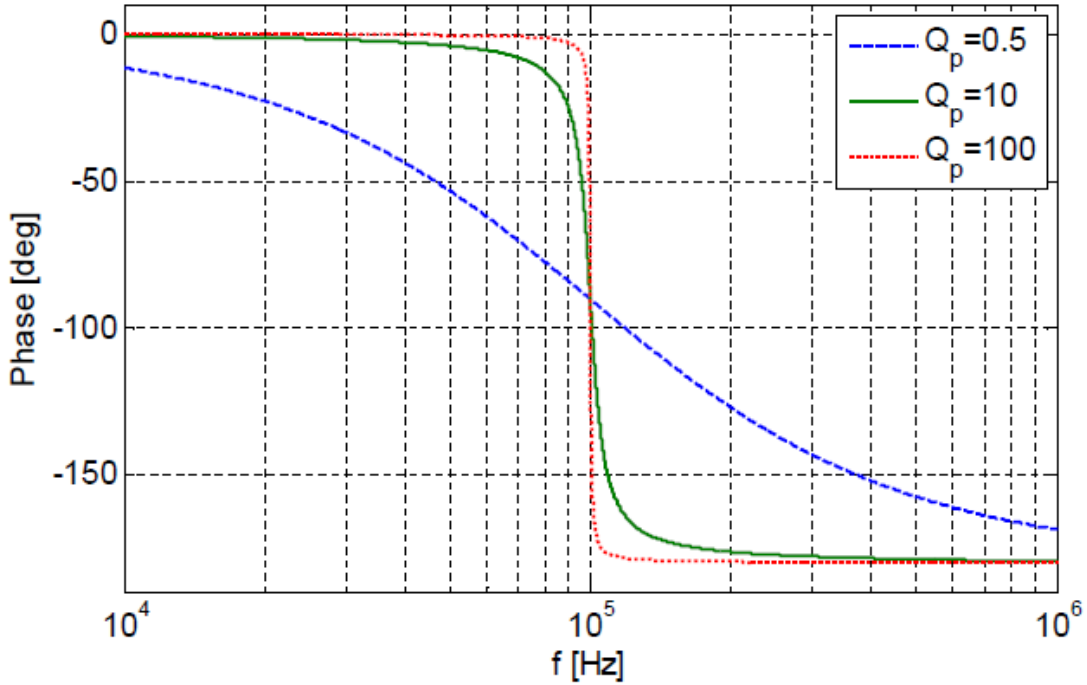

Notice how, in low Q poles, the phase starts to move about a decade before the pole (i.e. much earlier than the magnitude response.
As we shall see, low Q poles are desirable to lower power consumption and to minimize the sensitivity of the filter reponse to parameter variations.

Appendix material (use only if needed)

- Poles and poles Q
- Multi-loop feedback architectures (summary)
- Ladder filter synthesis (summary)
- Frequency normalization and de-normalization

Example 1

Design of a low-pass biquad:

- DC gain=1
- ω_0=1MHz
- Q_P=0.7

$$\frac{E_2}{E_1} = \frac{a_0}{s^2 + b_1 s + b_0} \qquad a_0 = b_0 = \omega_0^2 \qquad b_1 = \frac{\omega_0}{Q_P}$$

Flowgraph Implementation

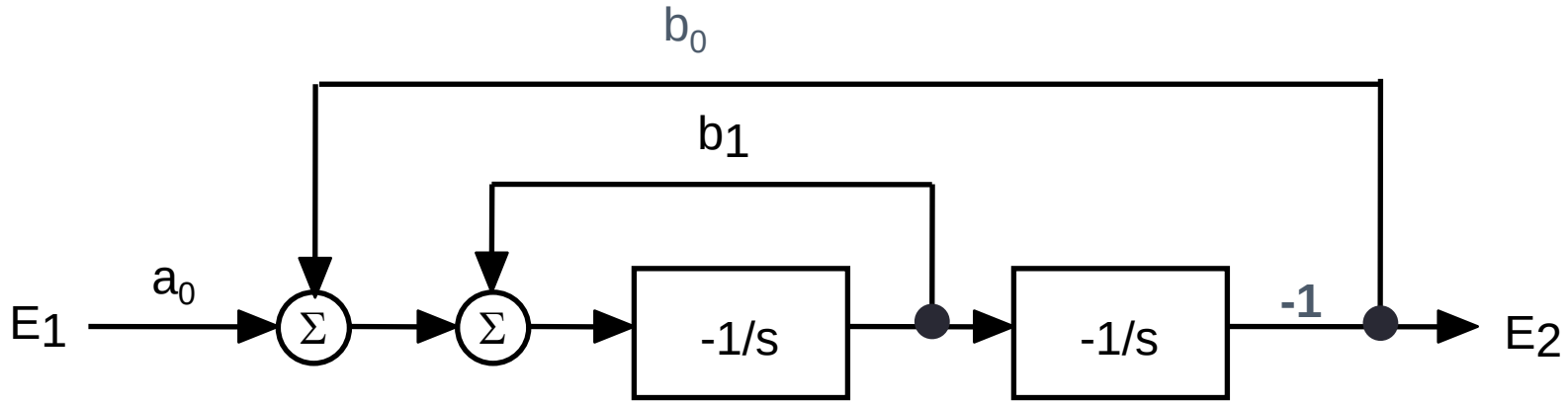

Modify flowgraph using flowgraph rules to simplify circuit implementation: divide and multiply by RC.

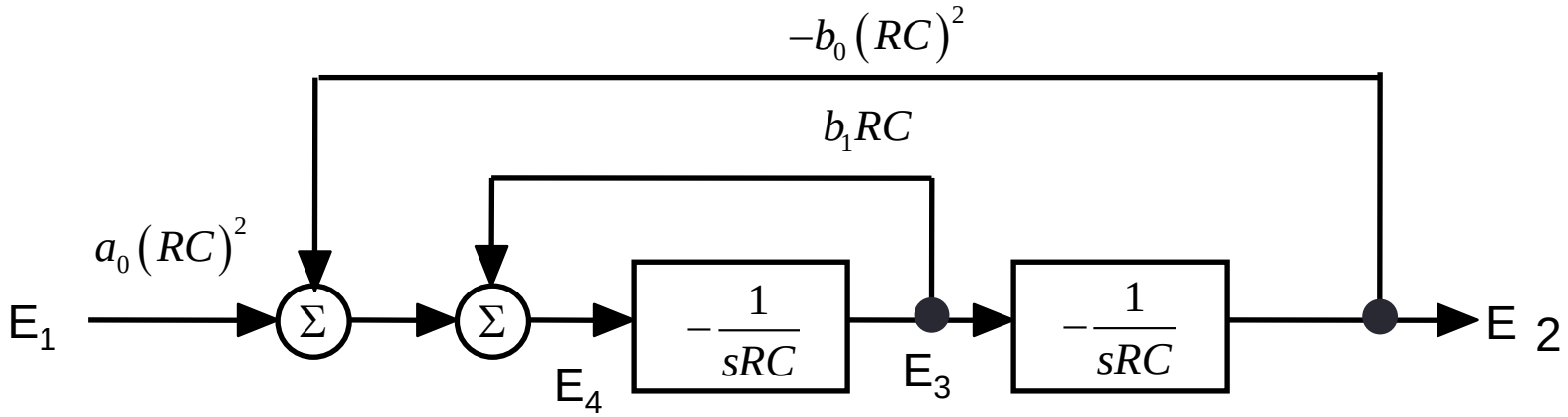

Flowgraph (2)

To get a 1:1 equivalence with the circuit, let: $\omega_0 = \frac{1}{RC}$

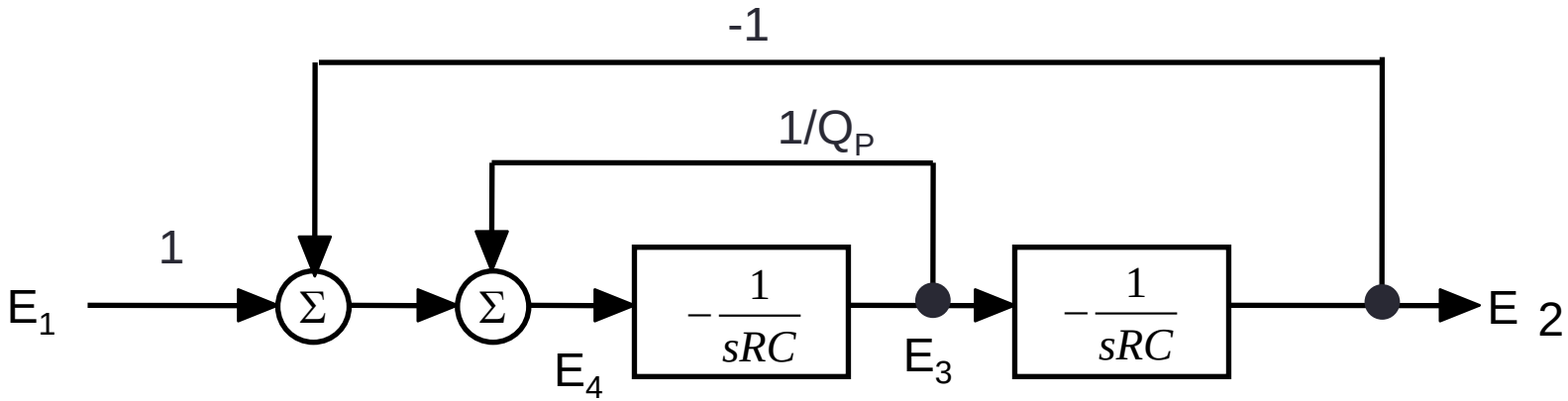

Circuit implementation:

$$R_{bk} = \frac{R}{b_k}$$

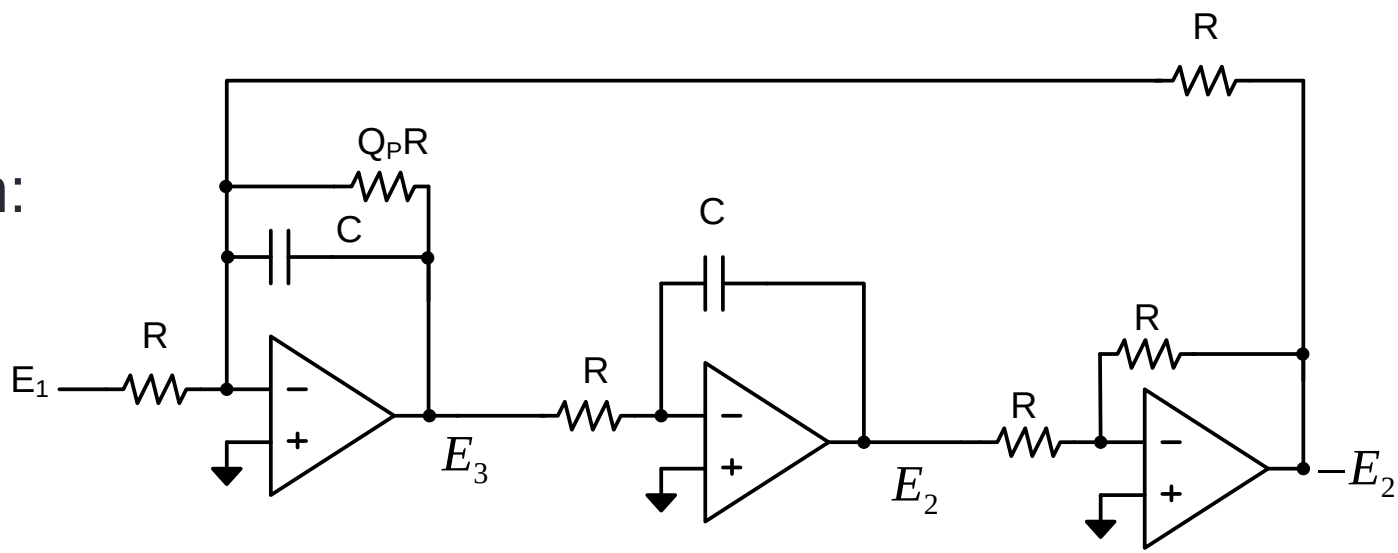

Generic Biquad Implementation

$$\frac{E_2}{E_1} = \frac{a_2 s^2 + a_1 s + a_0}{s^2 + b_1 s + b_0}$$

$$\frac{E_2'}{E_1} = \frac{1}{s^2 + b_1 s + b_0}$$ Low-pass output

$$E_3 = -sE_2'$$ Band-pass output

$$E_6 = s^2 E_2'$$ High-pass output

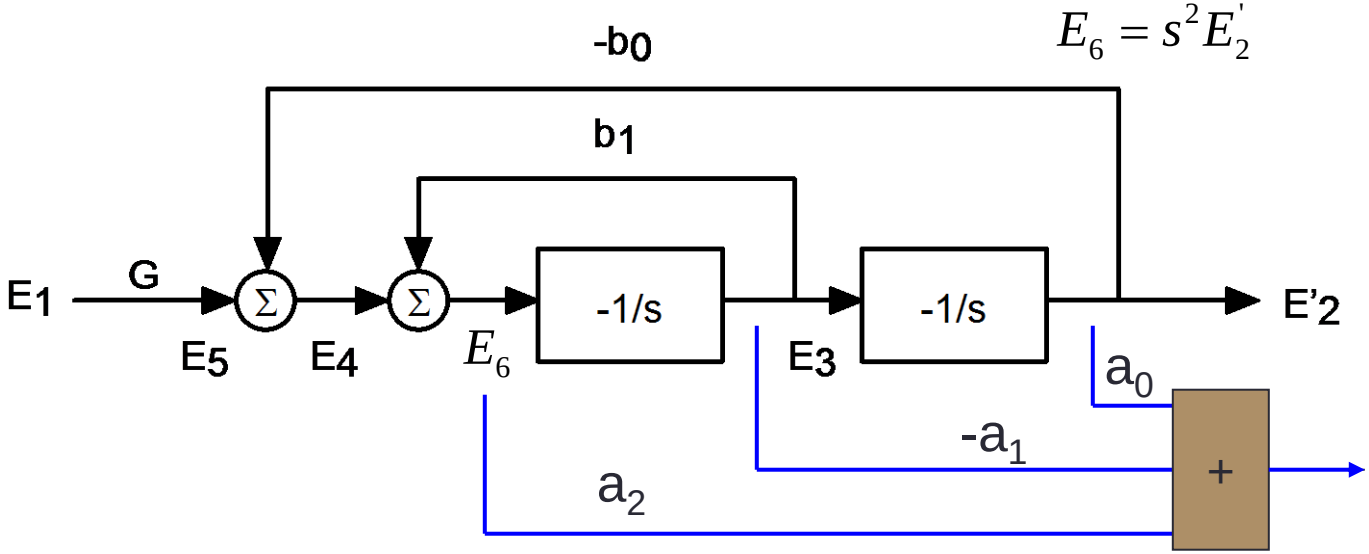

$$E_2 = E_2'\left(a_2 s^2 + a_1 s + a_0\right)$$

Example 2

Design of a low-pass biquad with transmission zero

- DC gain=1
- ω_0=1MHz
- Q=0.7
- ω_z=2MHz

$$\frac{E_2}{E_1} = \frac{a_2 s^2 + a_0}{s^2 + b_1 s + b_0} \qquad a_0 = b_0 = \omega_0^2 \qquad b_1 = \frac{\omega_0}{Q_P} \qquad a_2 = \frac{\omega_0^2}{\omega_z^2}$$

Flowgraph

$$\frac{E_2}{E_5} = \frac{a_0 + a_2 s^2}{s^2 + b_1 s + b_0}$$

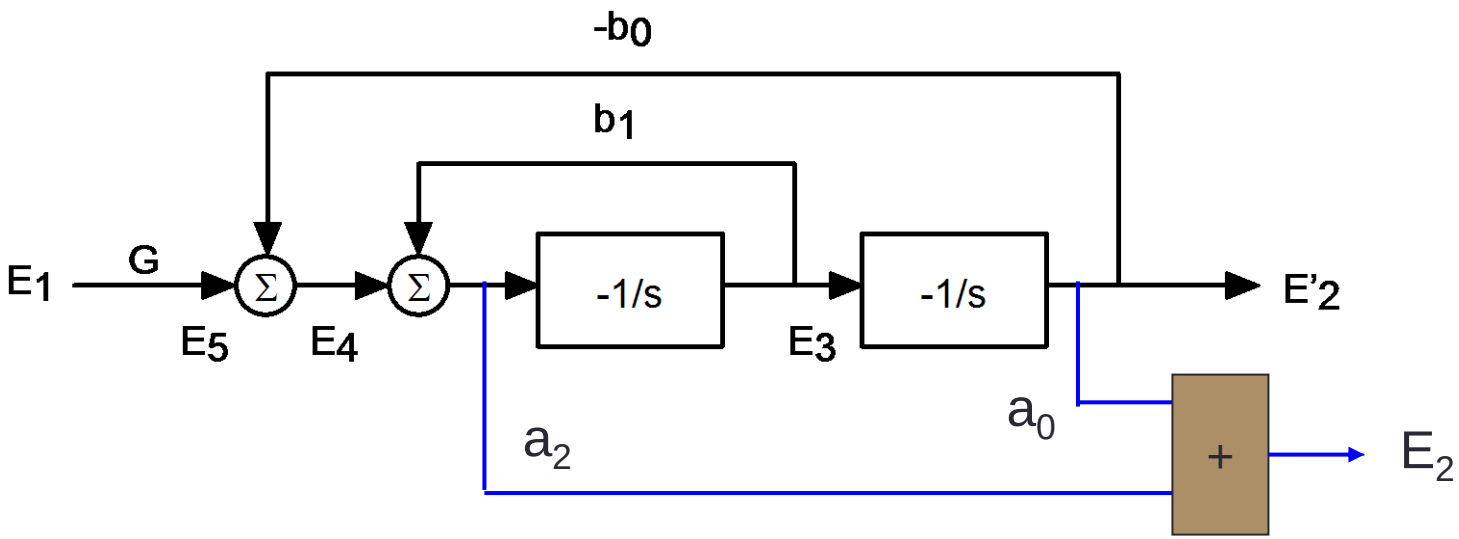

Example 2

Start with the poles.
Modify flowgraph using flowgraph rules to simplify circuit implementation: divide and multiply by RC

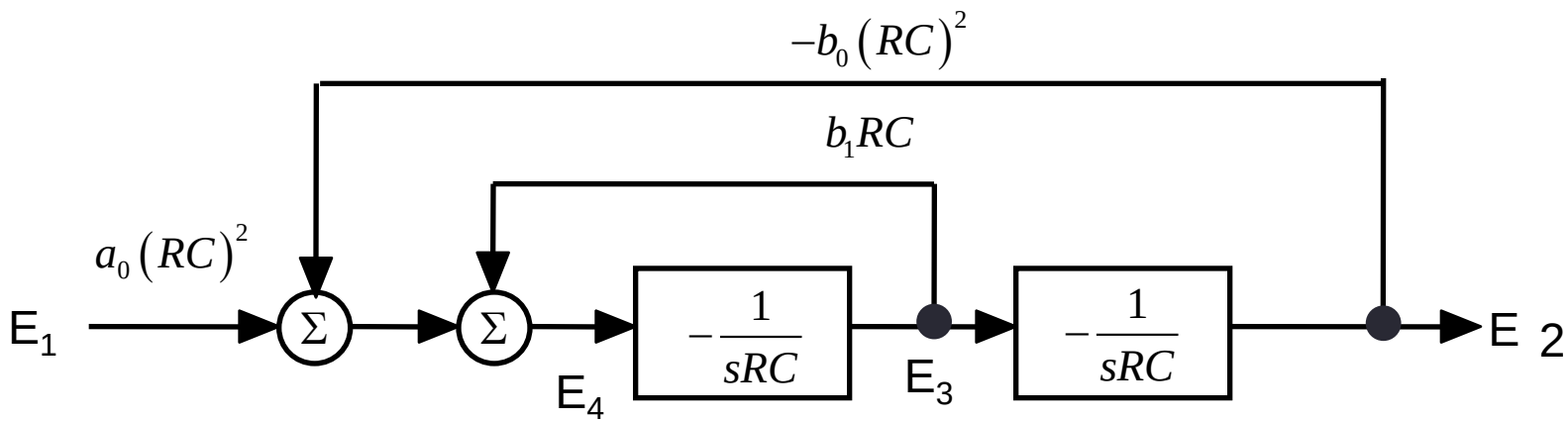

$$\frac{E_2}{E_1} = \frac{-a_0}{s^2 + b_1 s + b_0} \qquad a_0 = b_0 = \omega_0^2 \qquad b_1 = \frac{\omega_0}{Q_P}$$

Example 2

If we let $\omega_0 = \frac{1}{RC}$ the flowgraph is simply:

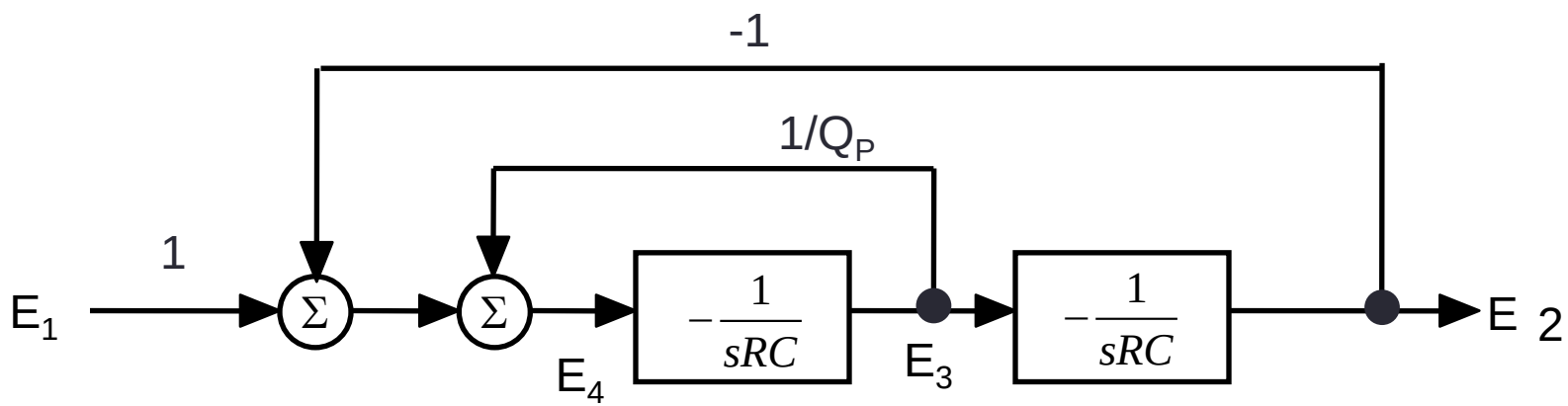

Example 2

Adder circuit implementation:

$$E_4 = E_1 - E_2 + \frac{E_3}{Q_P}$$

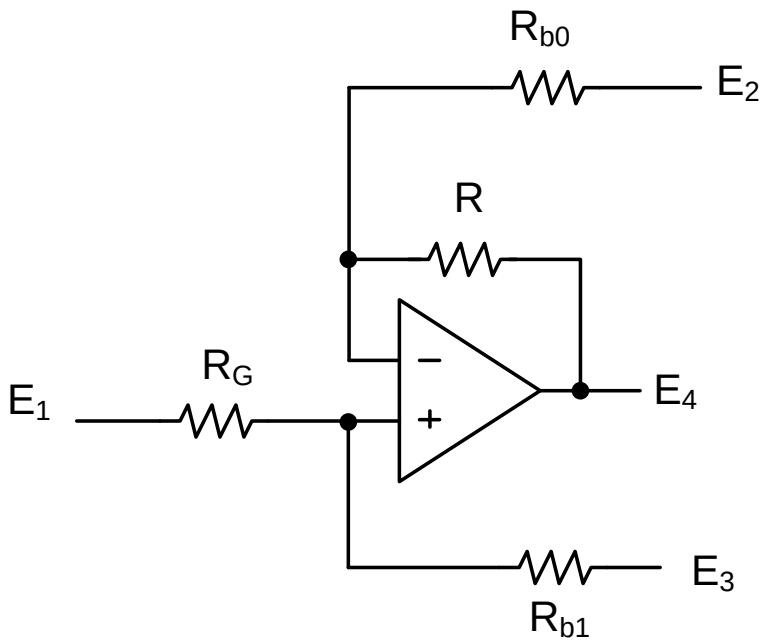

$$\frac{E_4}{E_2} = -\frac{R}{R_{b0}}$$

$$\boxed{R = R_{b0}}$$

$$\frac{E_4}{E_3} = \frac{R_G}{R_{b1} + R_G}\left(1 + \frac{R}{R_{b0}}\right)$$

$$\frac{1}{Q_P} = \frac{2R_G}{R_{b1} + R_G}$$

$$\boxed{R_{b1} = (2Q_P - 1)R_G}$$

With this implementation we cannot set the gain independent of the poles Q!

$$\frac{E_4}{E_1} = 4 - \frac{2}{Q_P}$$

Zeros Implementation

The zeros are now implemented with another adder:

$$V_{OUT} = E_2 + \frac{\omega_0^2}{\omega_z^2} E_4$$

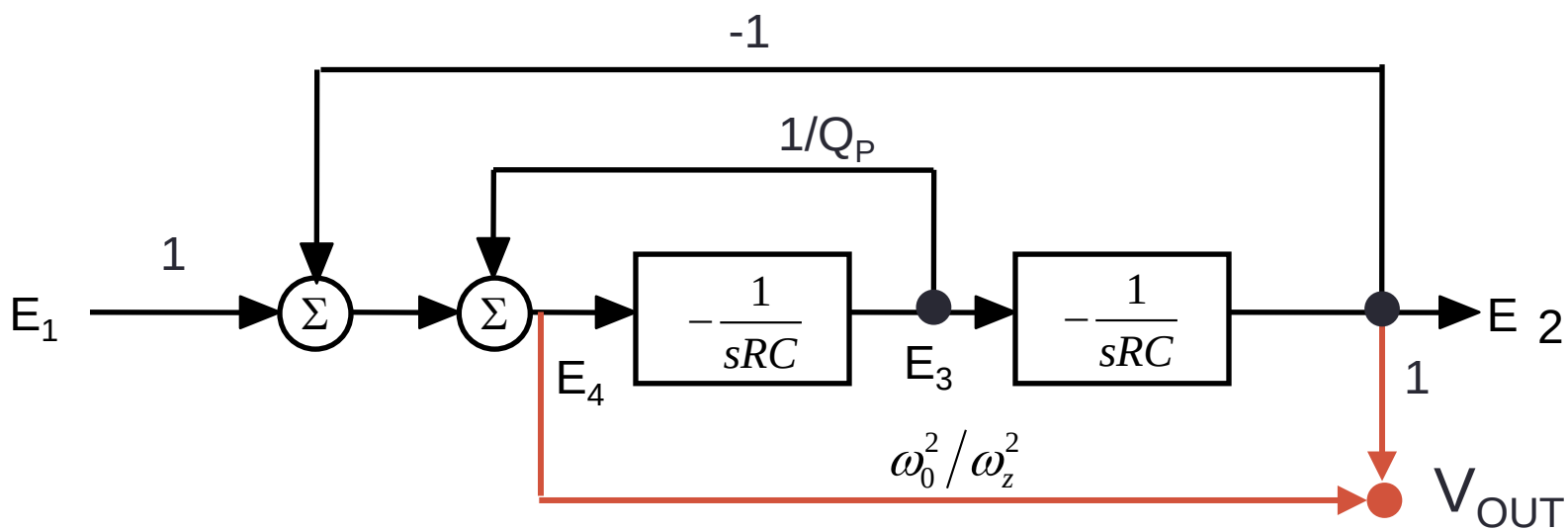

Circuit Implementation

$$V_{OUT} = E_2 + \frac{\omega_0^2}{\omega_z^2} E_4$$

$$R_{a2} = R \frac{\omega_z^2}{\omega_0^2}$$

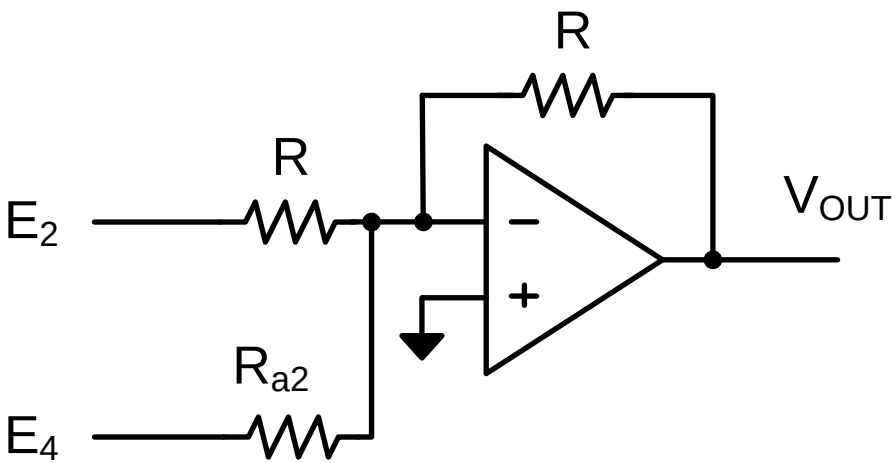

Final Circuit Implementation